CONTENTS 目 次

MISCELLANEOUS COVERS (1)	機殼機構 (1)	1
MISCELLANEOUS COVERS (2)	機殼機構 (2)	2
MISCELLANEOUS THREAD EYELETS-3NEEDLE	過線機構-三針五線	3
MISCELLANEOUS BUSHINGS	套管機構	4
MAIN SHAFT DRIVING MECHANISM	下主軸機構組	5
UPPER SHAFT & NEEDLE THREAD TAKE-UP MECHANISM	上主軸及針線提線諸元	6
NEEDLE BAR MECHANISM	針柱機構	7
PRESSER FOOT MECHANISM	壓腳機構	8
SPREADER MECHANISM	上飾線驅動機構	9
LOOPER DRIVING MECHANISM	下勾針驅動機構	10
FEED DRIVING CONTROL MECHANISM	送料具驅動控制機構	11
NEEDLE GUARD & FEED DRIVING MECHANISM	頂針片及送料具驅動機構	12
LUBRICATING MECHANISM	潤滑機構	13
EXCLUSIVE PARTS	專用配件	14
AUTO TRIMMER THREAD PULL-OFF MECHANISM-3NEEDLE	自動切線鬆線機構-三針五線	15
BOTTOM TRIMMER MECHANISM	底線切線刀機構	16
ELECTRICAL TYPE TOP THREAD WIPER & TRIMMER MECHANISM	電磁式上撥線及切線機構	17
PNEUMATIC TYPE TOP AIR WIPER & TRIMMER MECHANIS	氣壓式上吹風撥線及切線機構	18
ELECTRICAL TYPE DRIVING PRESSER FOOT LEFTER	電磁式直接驅動抬押腳組	19
PNEUMATIC TYPE PRESSER FOOT LEFTER	氣壓式抬押腳組	20
ELECTRICAL TYPE BOTTOM TRIMMER DRIVING MECHAN	電磁式下切刀驅動機構	21
PNEUMATIC TYPE BOTTOM TRIMMER DRIVING MECHAN	氣壓式下切刀驅動機構	22
TOP TRIMMER UNIVERSAL ADAPTER MECHANISM	上切刀萬向接頭機構	23
PNEUMATIC REGULATOR MECHANISM	氣壓調節器機構	24
"Q" DEVICE (1)	"Q"標準喇叭包邊裝置 (1)	25
"Q" DEVICE (2)	"Q"標準喇叭包邊裝置 (2)	26
"Q" DEVICE (3)	"Q"標準喇叭包邊裝置 (3)	27
PULLER MECHANISM EXCLUSIVE PARTS (1)	後托引輪機構(1)	28
PULLER MECHANISM EXCLUSIVE PARTS (2)	後托引輪機構(2)	29
PULLER MECHANISM EXCLUSIVE PARTS (3)	後托引輪機構(3)	30
THREAD STAND & SUPPORTING BOARD	線架及機頭托架組	31
ATTACHMENT BOX	附件盒	32
ACCESSORIES	附配件	33
TUBULAR ELASTIC WAIST BAND ATTACHMENT	褲頭包縫裝置	34
AC SERVO MOTOR & CONTROL BOX C.SET	伺服馬達控制箱組	35
MISCELLANEOUS THREAD EYELETS-4NEEDLE	過線機構-四針六線	36
AUTO TRIMMER THREAD PULL-OFF MECHANISM-4NEEDLE	自動切線鬆線機構-四針六線	37
ELECTRIC/AIR ASSEMBLY LINE	電/氣元件組裝線路圖	38
DESK BOARD MEASUREMENT PICTURE	桌板尺寸圖	39
INSTALLATION	機台與桌板組裝說明	40
GAUGE PARTS	標準規格件	附件一
GAUGE PARTS	標準規格件	附件二

1

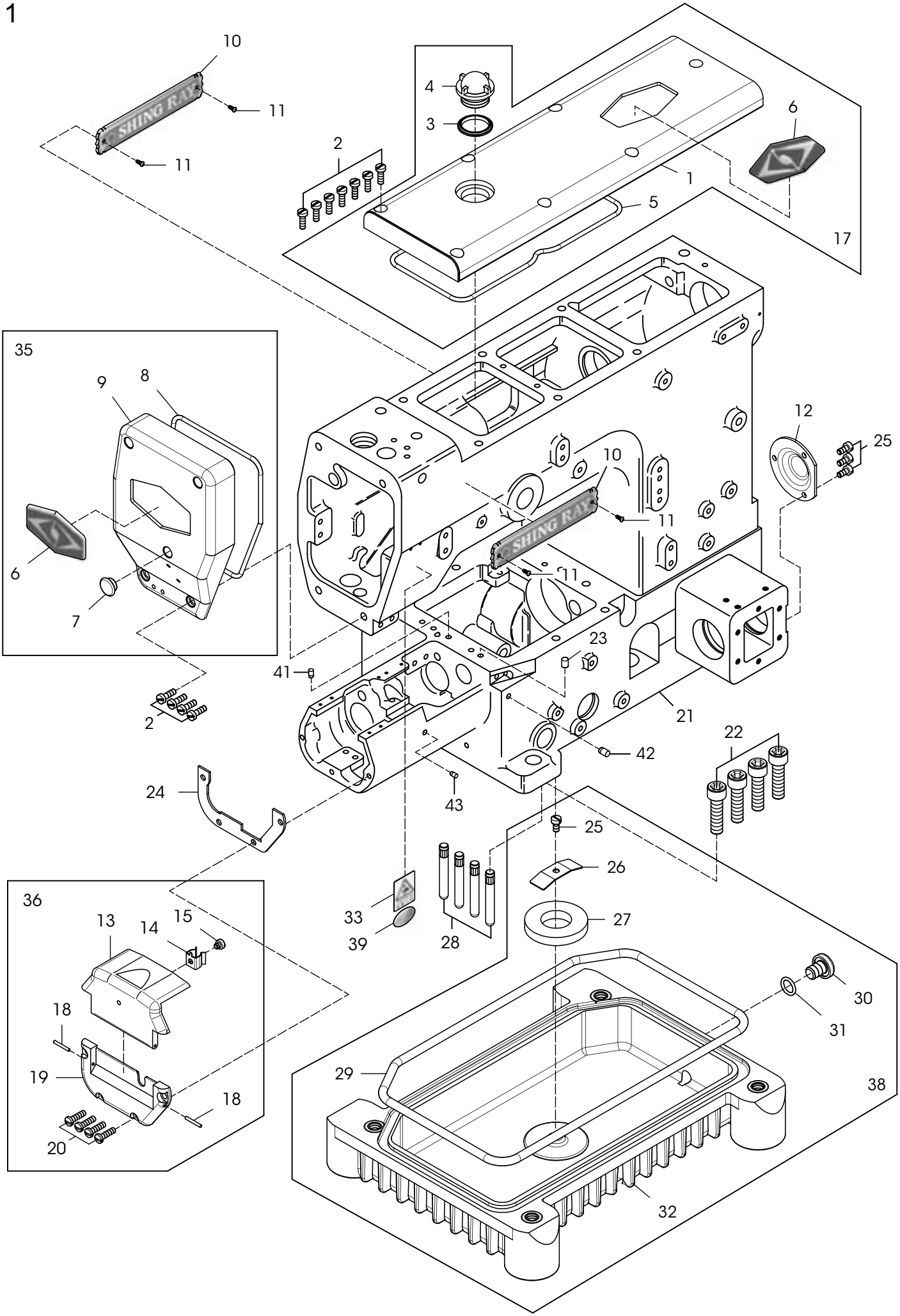
10
11
11
4
3
2
6
1
5
17
35
9
8
6
7
12
25
10
11
11
23
41
2
21
22
42
24
43
25
26
27
33
39
28
36
13
14
15
18
19
18
20
30
31
29
38
32

MISCELLANEOUS COVERS (1) 機殼機構 **(1)** **1**

Ref. No.	Parts No.	Description	品 名	Amt. Req.
1	07870101	Top Cover	上蓋	1
2	07870102	Screw(M4-0.7×12)	螺絲	11
3	07870103	Oil Sight Seal	上油鏡油封	1
4	07870104	Oil Sight Window	上油鏡	1
5	07870105	Top Cover Gasket	上蓋墊片	1
6	07870106	Emblem	銘牌	2
7	07870107	Seal Plug	止油膠塞	1
8	07870108	Head Cover Gasket	上側蓋墊片	1
9	07870109	Head Cover	上側蓋	1
10	07870110	Brand Name Plate	公司名牌	2
11	07870111	Rivet	鉚釘	4
12	07870112	Looper Thread Take-up Shaft Cover	底線分線盤傳動軸護蓋	1
13	07870113	Cylinder Side Cover (Upper)	圓筒上側蓋	1
14	07870114	Cover Latch Spring	鎖閂彈簧	1
15	07870115	Screw (M4-0.7×4)	螺絲	1
17	07870117	Top Cover C.Set (Upper)	上蓋組件	1
18	07870118	Side Cover Hinge Pin	側蓋樞鈕插銷	2
19	07870119	Cylinder Side Cover Hinge	圓筒側蓋樞鈕	1
20	07870120	Screw (M4-0.7×12)	螺絲	4
21	07870121	Machine Frame Unit	機殼	1
22	07870122	Screw (M8-1.25×20)	螺絲	4
23	07870123	Plug	止油塞(塑鋼)	1
24	07870124	Gasket	止油墊	1
25	07870125	Screw (M4-0.7×8)	螺絲	4
26	07870126	Magnet Holder	磁鐵固定壓板	1
27	07870127	Magnet	磁鐵	1
28	07870128	Machine Frame Supporting Bar	機體支柱	4
29	07870129	Oil Reservoir Gasket	油槽止油膠墊	1
30	07870130	Screw (3/8-24×11.5)	螺絲	1
31	07870131	Drain Hole Seal	排油螺絲油封	1
32	07870132	Oil Reservoir	油槽	1
33	07870133	Warning Sticker(Triangle)	警告貼紙 (三角形)	1
35	07870135	Head Cover C.Set (Upper)	上側蓋組件	1
36	07870136	Cylinder Side Cover C.Set(Upper)	圓筒上側蓋組件	1
38	07870138	Oil Reservoir C.Set	油槽組件	1
39	07870139	Warning Sticker(Cirile)	警告貼紙(圓形)	1
41	07870141	Plug	止油塞(塑鋼)	1
42	07870142	Plug	止油塞(鋁)	1
43	07870143	Plug	止油塞(鋁)	1

2

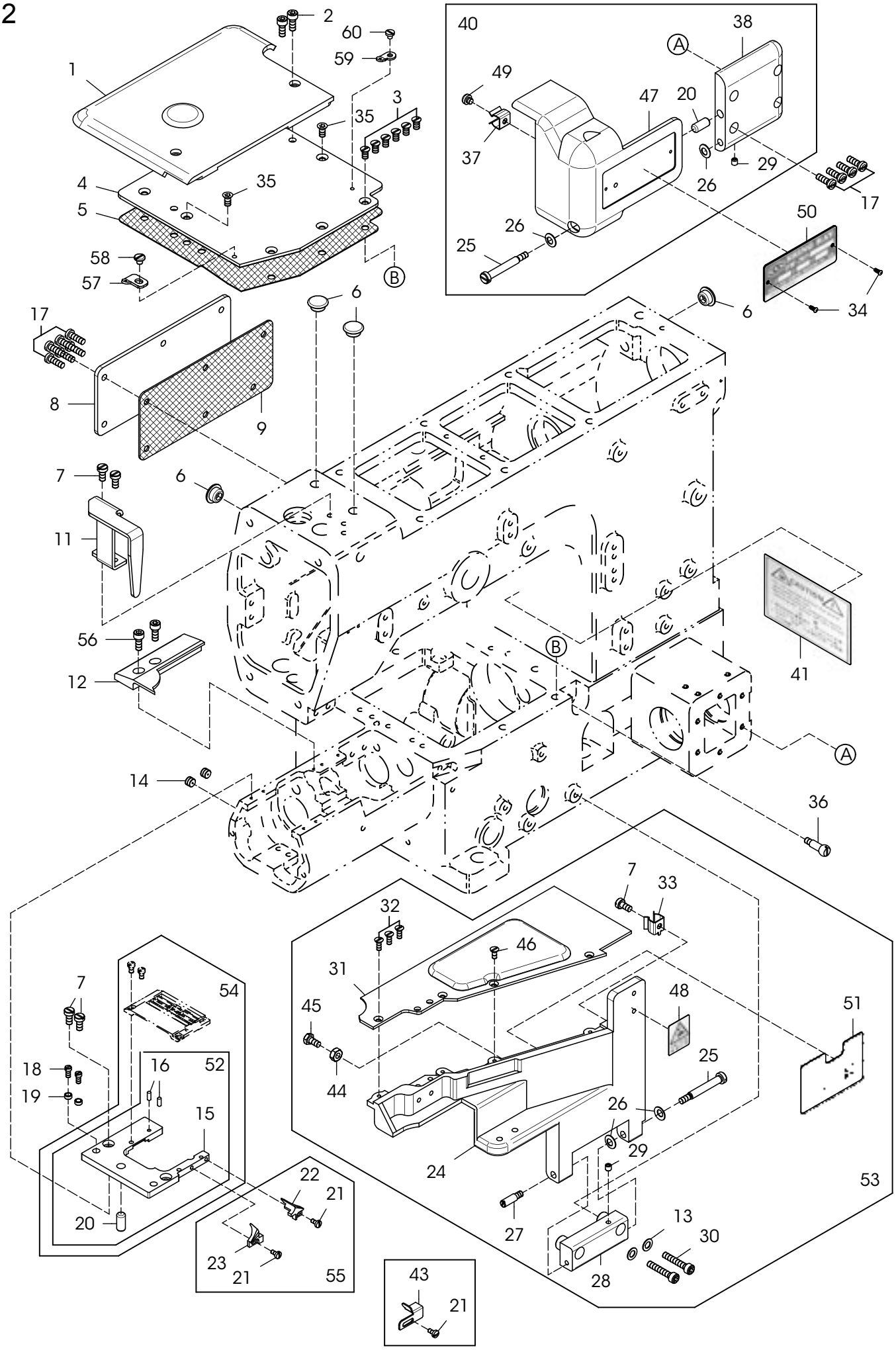
1
2
60
59
3
35
4
35
5
58
57
40
38
A
49
47
20
37
29
26
17
26
25
50
34
6
6
17
8
9
7
6
11
56
12
41
B
A
14
36
7
33
32
46
31
48
51
45
25
44
26
29
24
53
27
13
30
28
7
54
18
16
52
19
15
20
22
21
23
21
55
43
21

MISCELLANEOUS COVERS (2) 機殼機構 (2) **2**

Ref. No.		Parts No.	Description	品 名	Amt. Req.
1		07870201	Cloth Plate (Large).....	縫製平台.....	1
2		07870202	Screw (M4-0.7×10).....	螺絲.....	2
3		07870203	Screw (M4-0.7×7).....	螺絲.....	6
4		07870204	Crank Chamber Cover.....	曲軸室上蓋.....	1
5		07870205	Crank Chamber Cover Gasket.....	曲軸室墊片.....	1
6		07870107	Seal Plug.....	止油膠塞.....	4
7		07870125	Screw (M4-0.7×8).....	螺絲.....	5
8		07870208	Rear Cover.....	後蓋.....	1
9		07870209	Rear Cover Gasket.....	後蓋墊片.....	1
11		07870211	Needle Bar Guard.....	針柱護架.....	1
12		07870212	Supplementary Slide Cover.....	滑件補助蓋.....	1
13		07870213	Washer.....	墊片.....	2
14		07870214	Screw (M6-1×4).....	螺絲.....	2
15	★	07870215	Stitch Plate Support.....	針鈑支架.....	1
16		07870216	Knock Pin.....	頂出銷.....	2
17		07870102	Screw (M4-0.7×12).....	螺絲.....	10
18		07870218	Screw (M3-0.5×6.5).....	螺絲.....	2
19		07870219	Positioning Bushing.....	定位襯套.....	2
20		07870220	Knock Pin.....	頂出銷.....	2
21		07870221	Screw (M2.6-0.45×5).....	螺絲.....	3
22		07870222	Fabric Guide (Right).....	倒骨布導器 (右).....	1
23		07870223	Fabric Guide (Left).....	倒骨布導器 (左).....	1
24		07870224	Front Cover (Lower).....	前蓋底座.....	1
25		07870225	Screw (M4-0.7×8).....	螺絲.....	2
26		07870226	Conical Spring Washer.....	錐形彈簧墊圈.....	4
27		07870227	Screw (M4-0.7×13).....	螺絲.....	1
28		07870228	Front Cover Hinge.....	前蓋鉸鏈.....	1
29		07870229	Screw (M4-0.7×4).....	螺絲.....	2
30		07870230	Screw (M4-0.7×22).....	螺絲.....	2
31		07870231	Front Cover (Upper).....	前蓋頂座.....	1
32		07870232	Screw (M3-0.5×6).....	螺絲.....	3
33		07870114	Cover Latch Spring.....	鎖閂彈簧.....	1
34		07870111	Rivet.....	鉚釘.....	2
35		07870235	Screw (M4-0.7×8).....	螺絲.....	2
36		07870236	Screw (M4-0.7×5).....	螺絲.....	1
37		07870237	Cover Latch Spring.....	鎖閂彈簧.....	1
38		07870238	Looper Thread Take-Up Driving Chamber Cover....	底線分線盤驅動室蓋.....	1
40		07870240	Looper Thread Take Up Cover C.Set.....	底線分線盤凸輪蓋組.....	1

★ 請參照附件一、附件二【標準規格件】

2

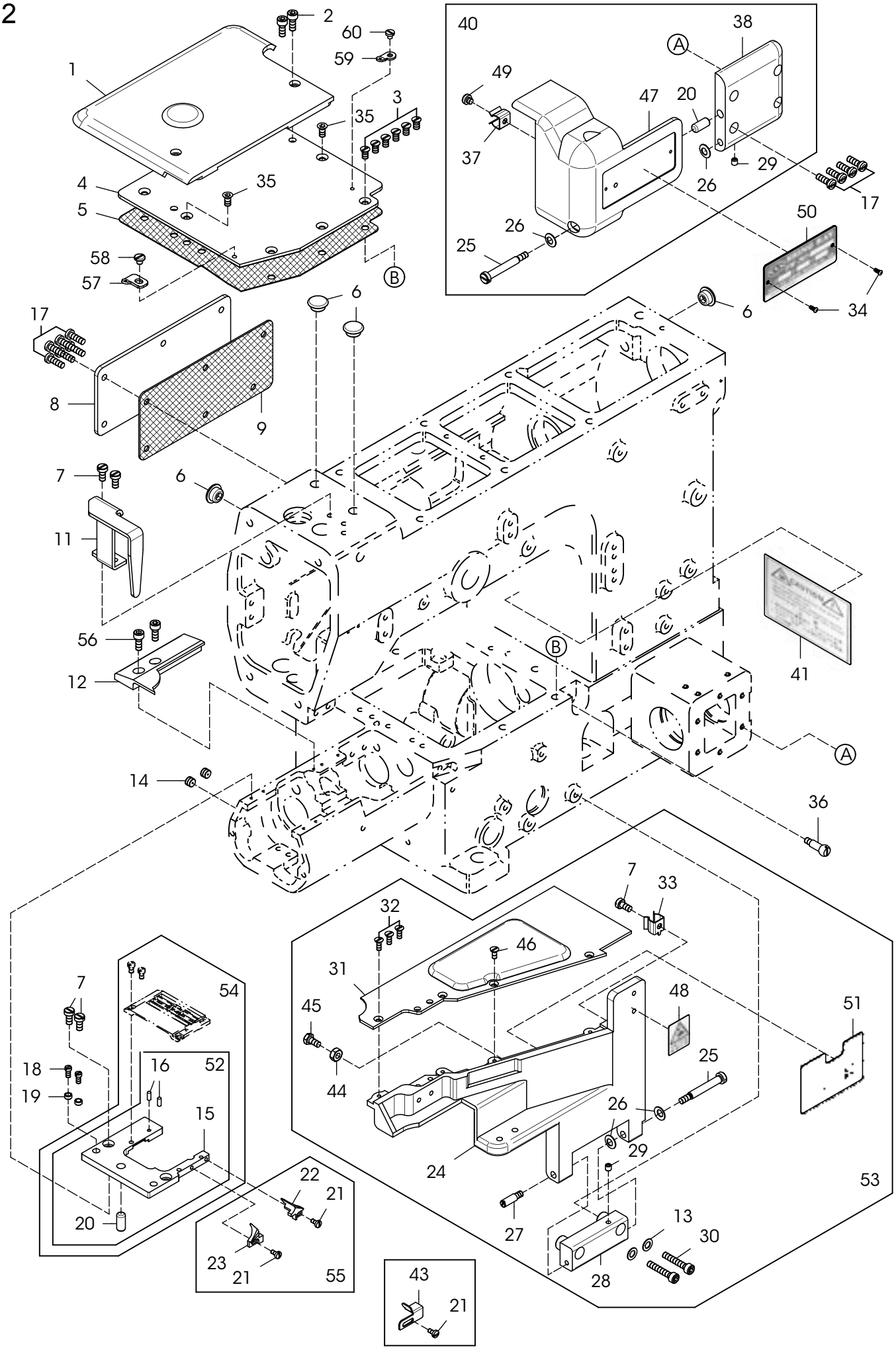
1
2
60
59
3
35
4
35
5
58
57
40
38
A
49
47
20
37
29
26
17
26
25
50
34
6
6
17
8
9
7
6
11
56
12
41
B
A
14
36
7
33
32
46
31
48
51
45
25
44
26
29
24
53
27
13
30
28
7
54
18
16
52
19
15
20
22
21
23
21
55
43
21

Ref. No.		Parts No.	Description	品 名	Amt. Req.
41		07870241	Warning Sticker(Tetraqon).....	警告貼紙(四角形).....	1
43	★	07870243	Fabric Guide.....	擋邊.....	1
44		07870244	Nut.....	螺帽.....	1
45		07870245	Screw(M4-0.7×8).....	螺絲.....	1
46		07870246	Screw(M3-0.5×5).....	螺絲.....	1
47		07870247	Looper Thread Take-Up Cover.....	底線分線盤凸輪蓋.....	1
48		07870133	Warning Sticker(Triangle).....	警告貼紙(三角形).....	1
49		07870249	Screw(M4-0.7×3.5).....	螺絲.....	1
50		07870250	Model Plate(see the below).....	型號銘牌.....	1
51		07870251	Warning Sticker.....	警告標籤.....	1
52		07870252	Stitch Plate Support.....	針板支架.....	1
53		07870253	Front Cover (Lower) C.Set.....	前蓋底座組.....	1
54		07870254	Stitch Plate Support C.Set.....	針板支架組.....	1
55	★	07870255	Fabric Guide C.Set.....	倒骨布導器組.....	1
56		07870256	Screw(M4-0.7×8).....	螺絲.....	2
57		07870257	Lower Knife Carrier Guide.....	下切刀托架導引片.....	1
58		07870258	Screw(M4-0.7×4).....	螺絲.....	1
59		07870259	Looper Thread Eyelet.....	底線穿線孔.....	1
60		07870260	Screw (M3-0.5×3.3).....	螺絲.....	1

★ 請參照附件一、附件二【標準規格件】

3

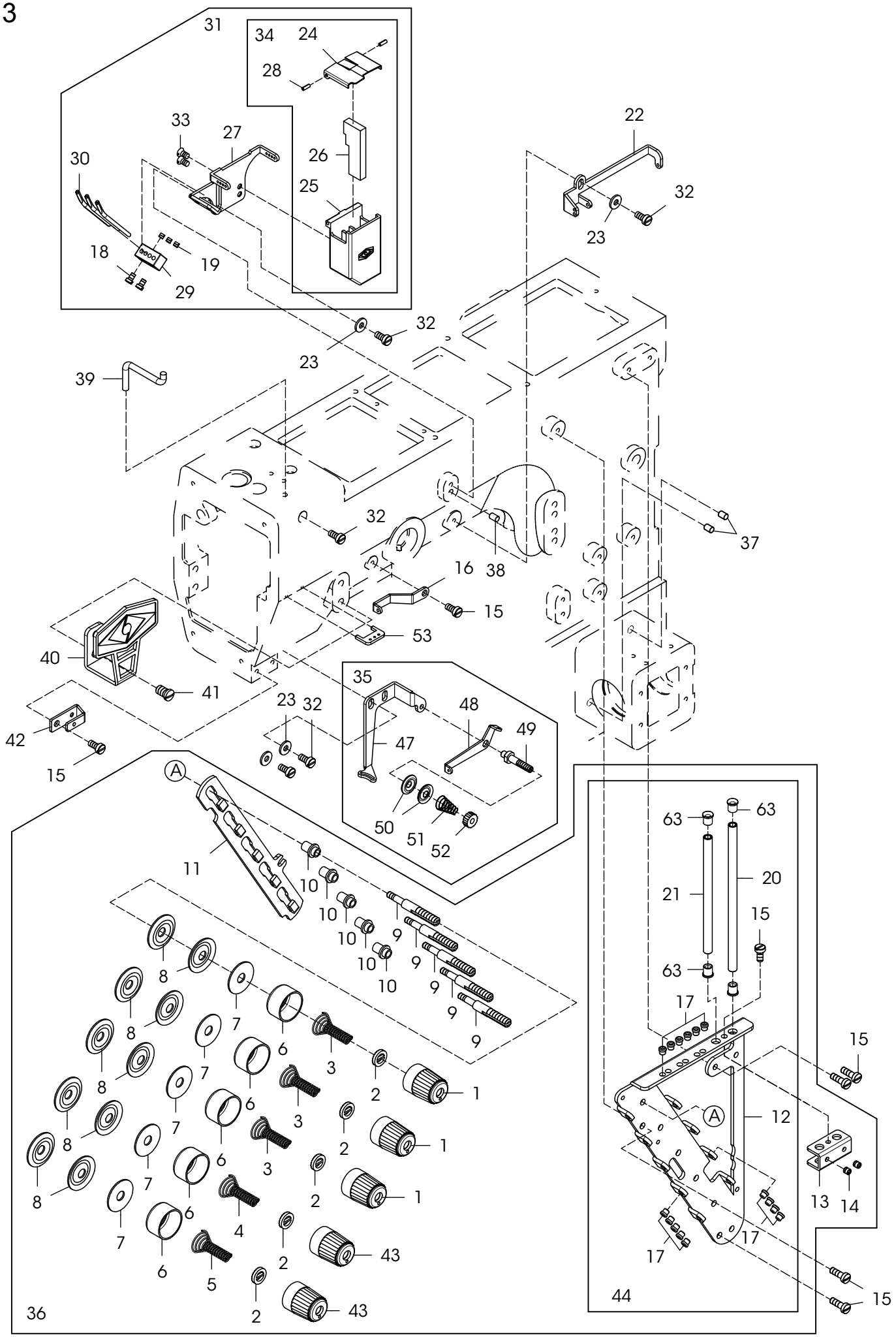
31
34
24
28
33
27
26
25
30
18
19
29
22
32
23
32
23
39
32
37
16
38
15
53
40
41
42
15
35
48
49
47
50
51
52
23
32
A
11
10
9
8
7
6
3
2
1
4
5
43
36
63
21
20
15
17
12
13
14
44

Ref. No.	Parts No.	Description	品 名	Amt. Req.
1	07870301	Thread Tension Spring Cap(Blue).....	上線張力彈簧調整鈕(藍)....	3
2	07870302	Tension Spring Disc Support.....	張力彈簧調整圓盤.....	5
3	07870303	Needle Thread Tension Spring.....	針線張力彈簧.....	3
4	07870304	Top Cover Thread Tension Spring.....	上飾線張力彈簧.....	1
5	07870305	Looper Thread Tension Spring	下勾針張力彈簧.....	1
6	07870306	Thread Tension Spring Retainer.....	上線張力彈簧固定座.....	5
7	07870307	Felt.....	氈墊.....	5
8	07870308	Tension Disc.....	張力調整盤.....	10
9	07870309	Tension Post.....	上線張力彈簧支柱.....	5
10	07870310	Tension Post Ferrule.....	上線張力彈簧支柱套圈.....	5
11	07870311	Tension Disc Separator.....	上線張力圓盤分離器.....	1
12	07870312	Tension Post Support.....	上線張力組支柱座.....	1
13	07870313	Thread Eyelet Pipe Stay.....	過線導管固定座.....	1
14	07870229	Screw (M4-0.7×4).....	螺絲.....	2
15	07870125	Screw (M4-0.7×8).....	螺絲.....	7
16	07870316	Top Cover Thread Eyelet (Left).....	上飾線過線桿 (左).....	1
17	07870317	Thread Eyelet	陶瓷過線孔.....	15
18	07870318	Screw (1/8-44×5).....	螺絲.....	2
19	07870319	Screw (1/8-44×3).....	螺絲.....	3
20	07870320	Thread Eyelet Pipe (Long).....	過線導管 (長).....	1
21	07870321	Thread Eyelet Pipe (Short).....	過線導管 (短).....	1
22	07870322	Top Cover Thread Eyelet (Right).....	上飾線過線桿 (右).....	1
23	07870323	Washer.....	墊片	4
24	07870324	SP Container Cover.....	矽油槽蓋.....	1
25	07870325	SP Container.....	矽油儲存槽.....	1
26	07870326	Felt.....	吸油氈.....	1
27	07870327	Needle Thread Eyelet.....	針線過線架.....	1
28	07870328	SP Container Cover Pin.....	矽油槽蓋固定插銷.....	2
29	07870329	Thread Eyelet Support.....	過線桿固定座.....	1
30	07870330	Thread Eyelet (Front).....	過線桿.....	3
31	07870331	SP Device, Complete Set.....	針線矽油組.....	1
32	07870102	Screw (M4-0.7×12).....	螺絲.....	5
33	07870333	Screw (9/64-40×7).....	螺絲.....	2
34	07870334	SP Container C.Set.....	矽油儲存槽組件.....	1
35	07870335	Top Cover Tharead Guide.....	上飾組板組件.....	1
36	07870336	Tension Post Support C.Set.....	上線張力支柱座組件.....	1
37	07870337	Guide Pin.....	固定插銷.....	2
38	07870338	Guide Pin.....	固定插銷.....	1
39	07870339	Needle Thread Guide.....	針線導架.....	1
40	07870340	Needle Thread Take-up Guard.....	針線提線桿護架.....	1

3

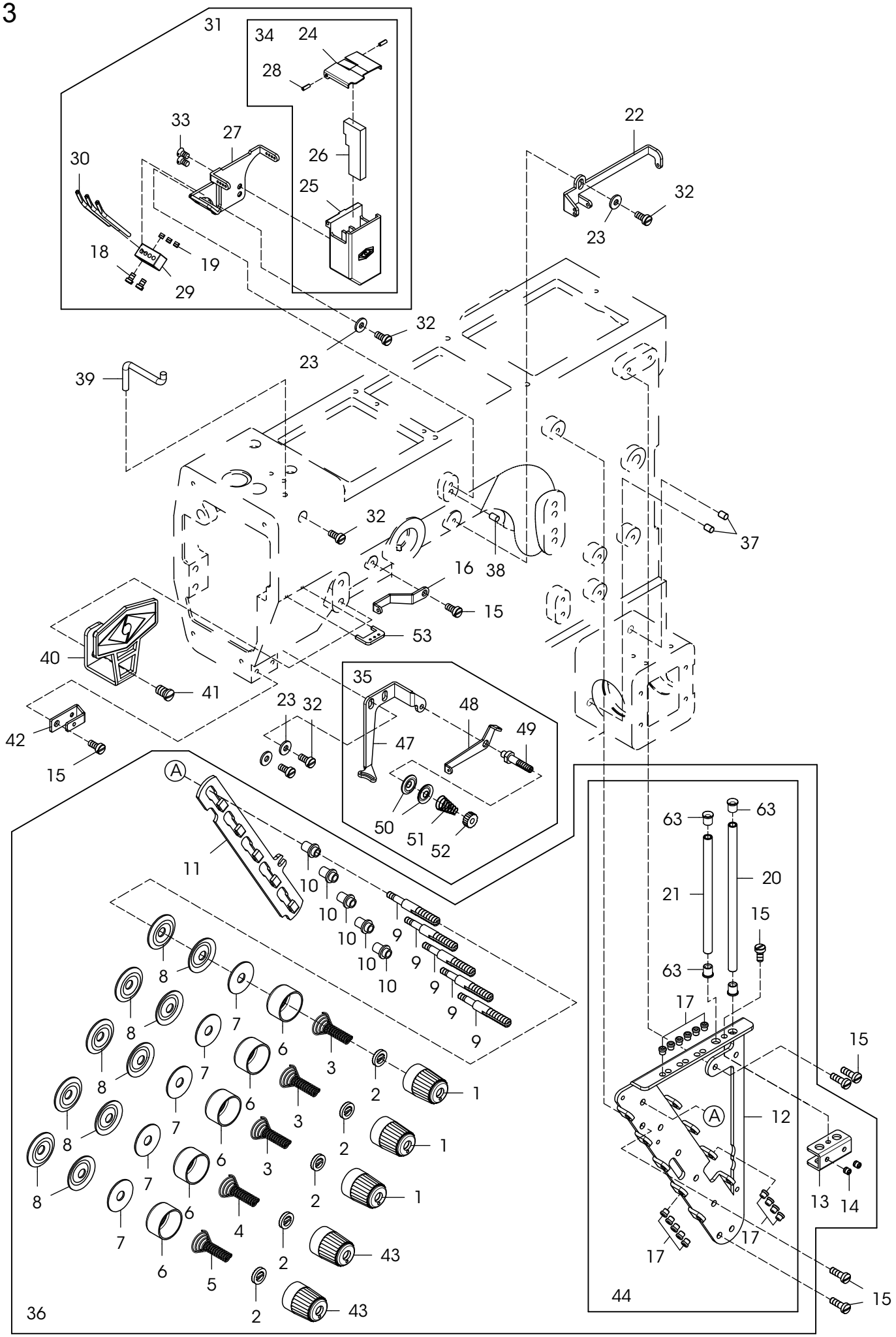
31
34
24
28
33
27
26
25
30
18
19
29
22
32
23
32
23
39
32
37
16
38
15
53
40
41
42
15
35
48
49
47
50
51
52
23
32
A
11
10
9
8
7
6
3
2
1
4
5
43
36
63
21
20
15
17
12
13
14
44

Ref. No.	Parts No.	Description	品 名	Amt. Req.
41	07870341	Screw (M6-1×10)……	螺絲……	1
42	07870342	Needle Thread Retainer Support……	針線張力調整組固定座(小).	1
43	07870343	Thread Tension Spring Cap(Red)……	上線張力彈簧調整鈕(紅)….	2
44	07870344	Tension Post Support……	上線張力支柱座……	1
47	07870347	Top Cover Thread Guide……	上飾線導板……	1
48	07870348	Supplementary Thread Guide……	上飾線輔助導板……	1
49	07870349	Tension Post ……	上飾線張力調整組支柱……	1
50	07870350	Supplementary Tension Disc……	上飾線張力調整盤……	2
51	07870351	Supplementary Tension Spring……	上飾線張力調整彈簧……	1
52	07870352	Thread Tension Spring Cap……	鬆緊調鈕……	1
53	07870353	Needle Thread Eyelet……	過線導片……	1
63	07400383	Thread Eyelet……	過線陶瓷(深灰)……	4

4

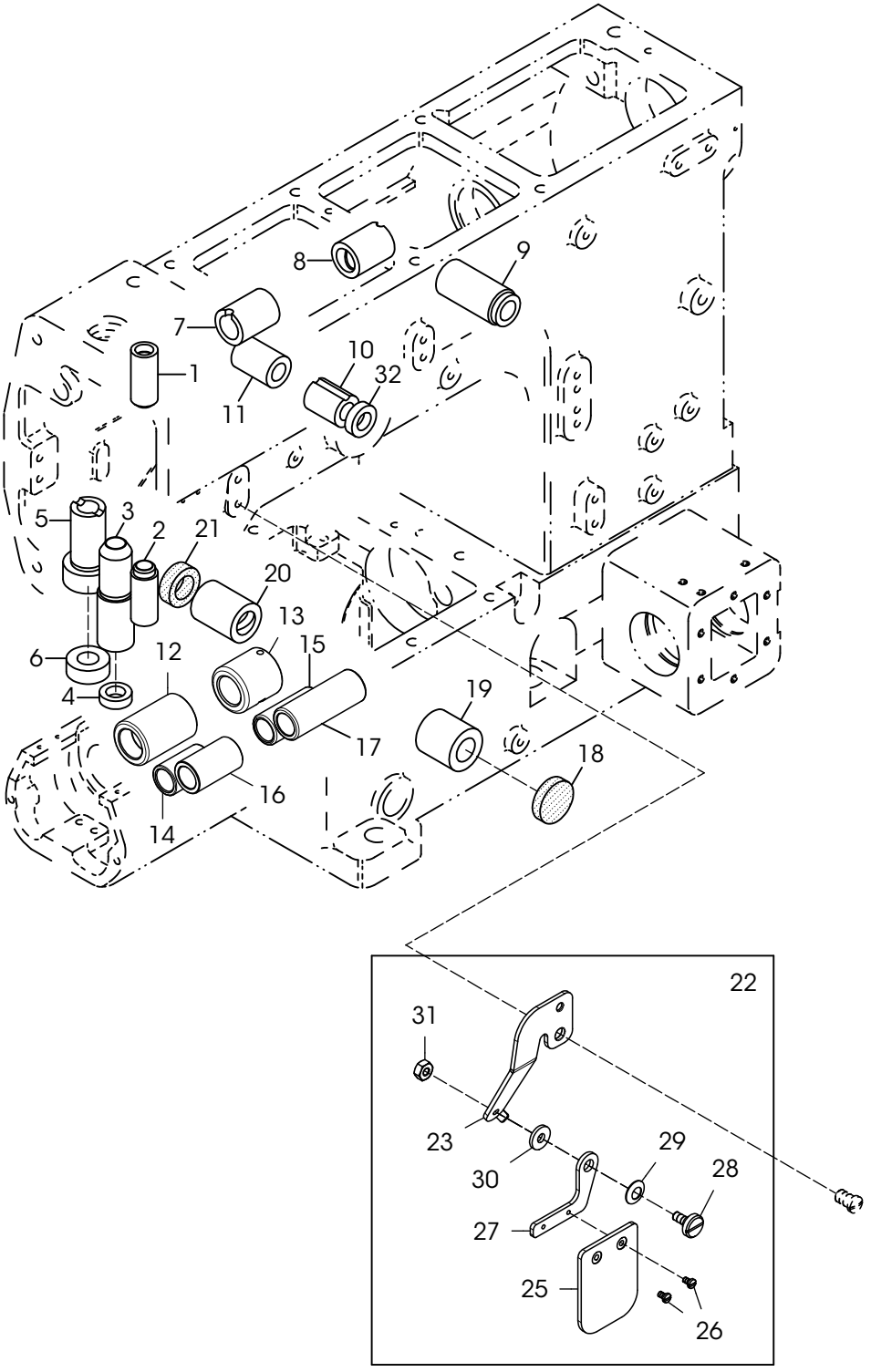
1
2
3
4
5
6
7
8
9
10
11
12
13
14
15
16
17
18
19
20
21
22
23
25
26
27
28
29
30
31
32

MISCELLANEOUS BUSHINGS 套管機構 **4**

Ref. No.	Parts No.	Description	品 名	Amt. Req.
1	07870401	Needle Bar Bushing (Upper).....	針柱套管(上).....	1
2	07870402	Needle Bar Bushing (Lower).....	針柱套管(下).....	1
3	07870403	Presser Bar Bushing.....	壓腳套管.....	1
4	07870404	Oil Seal.....	油封.....	1
5	07870405	Spreader Driving Bar Bushing.....	上飾線打線器套管.....	1
6	07870406	Oil Seal.....	油封.....	1
7	07870407	Spreader Driving Shaft Bushing (Left).....	上飾線打線器傳動軸套管(左)	1
8	07870408	Spreader Driving Shaft Bushing (Right).....	上飾線打線器傳動軸套管(右)	1
9	07870409	Foot Lifter Lever Bushing	抬壓腳連桿套管.....	1
10	07870410	Needle Thread Take-up Bushing (Front).....	針線提線桿套管(前).....	1
11	07870411	Needle Thread Take-up Bushing (Rear).....	針線提線桿套管(後).....	1
12	07870412	Lower Shaft Bushing (Left).....	下傳動軸套管(左).....	1
13	07870413	Lower Shaft Bushing (Right).....	下傳動軸套管(右).....	1
14	07870414	Differential Feed Bar Shaft Bushing (Left).....	差動送料具傳動軸套管(左).	1
15	07870415	Differential Feed Bar Shaft Bushing (Right)...	差動送料具傳動軸套管(右).	1
16	07870416	Feed Bar Lift Shaft Bushing (Left).....	送料具傳動軸套管(左).....	1
17	07870417	Feed Bar Lift Shaft Bushing (Right).....	送料具傳動軸套管(右).....	1
18	07870418	Oil Seal.....	油封.....	1
19	07870419	Looper Driving Shaft Bushing (Front).....	下勾針傳動軸套管(前).....	1
20	07870420	Looper Driving Shaft Bushing (Rear).....	下勾針傳動軸套管(後).....	1
21	07870421	Seal Plug.....	止油封塞.....	1
22	07870422	Eye Guard, Complete Set.....	護目鏡組.....	1
23	07870423	Safety Plate Support.....	護目鏡固定座.....	1
25	07870425	Safety Plate.....	護目鏡片.....	1
26	07870426	Screw (3/32-56×4).....	螺絲.....	2
27	07870427	Safety Plate Holder.....	護目鏡支架.....	1
28	07870428	Screw (11/64-40×9.7).....	螺絲.....	1
29	07870429	Conical Spring Washer.....	錐形彈簧墊圈.....	1
30	07870430	Washer.....	墊片.....	1
31	07870431	Nut.....	螺帽.....	1
32	07870432	Oil Seal.....	油封.....	1

5

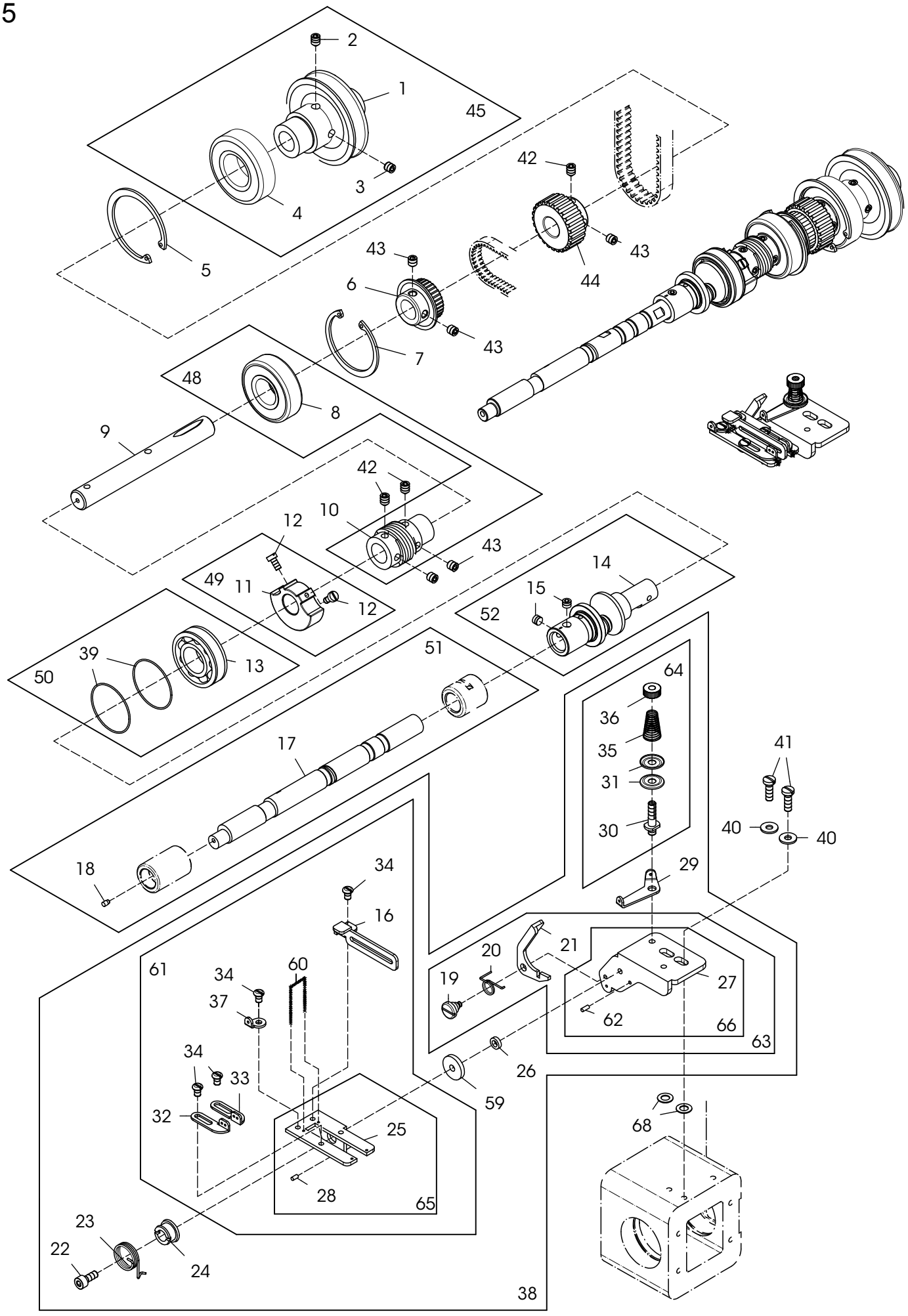
2
1
45
3
4
5
42
43
44
43
6
43
7
48
8
9
42
10
12
43
49
11
12
14
15
52
39
13
50
51
64
36
35
31
30
41
40
40
17
18
34
16
29
61
34
60
37
20
21
19
27
62
66
63
34
33
32
26
59
68
25
28
65
23
22
24
38

MAIN SHAFT DRIVING MECHANISM 下主軸機構組 **5**

Ref. No.	Parts No.	Description	品　　名	Amt. Req.
1	07870501	Pulley	皮帶輪	1
2	07870502	Screw (M6-1×8)	螺絲(尖底)	1
3	07870503	Screw (M6-1×8)	螺絲	1
4	07870504	Ball Bearing (Right)	滾珠培林(右)	2
5	07870505	Retaining Ring	扣環	1
6	07870506	Looper Thread Take-Up Driving Sprocket	底線分線盤驅動鏈連	1
7	07870507	Retaining Ring	扣環	1
8	07870508	Ball Bearing (Middle)	滾珠培林(中)	1
9	07870509	Lower Shaft (Right)	下傳動軸(右)	1
10	07870510	Oil Pump Driving Worm	油泵傳動連桿	1
11	07870511	Counterweight (Small)	平衡配重凸輪	1
12	07870125	Screw (M4-0.7×8)	螺絲	2
13	07870513	Ball Bearing (Left)	滾珠培林(左)	1
14	07870514	Lower Crankshaft	下曲軸	1
15	07870214	Screw (M6-1×4)	螺絲	2
16	07870516	Looper Thread Guide	底線導板	1
17	07870517	Lower Shaft(Left)	下傳動軸(左)	1
18	07870518	Seal Plug	止油封塞	1
19	07870519	Screw(1/8-44×3)	螺絲	1
20	07870520	Latch Spring	鎖彈簧	1
21	07870521	Looper Thread Guide Latch Lever	底線導板鎖壓板	1
22	07870202	Screw (M4-0.7×10)	螺絲	1
23	07870523	Spring	彈簧	1
24	07870524	Spring Bushing	彈簧襯套	1
25	07870525	Thread Take-up Eyelet Holder	底線過線台	1
26	07870526	Bush	襯套	1
27	07870527	Thread Take-up Eyelet Bracket	底線過線組支架	1
28	07870528	Pin	插銷	1
29	07870529	Looper Thread Eyelet	底線輔助導板	1
30	07870530	Looper Thread Tension Post	底線張力調整組支柱	1
31	07870350	Looper Thread Supplementary Tension Disc	底線張力調整盤	2
32	07870532	Thread Take-up Eyelet (Left)	底線過線片(左)	1
33	07870533	Thread Take-up Eyelet (Right)	底線過線片(右)	1
34	07870534	Screw (9/64-40×4)	螺絲	4
35	07870535	Looper Thread Supplementary Tension Spring	底線張力調整彈簧	1
36	07870352	Thread Tension Spring Cap	鬆緊調鈕	1
37	07870537	Needle Thread Eyelet	過線片	1
38	07870538	Thread Take Up Eyelet C. Set	底線過線台總成	1
39	07870539	O-Ring	O型橡膠環	2
40	07870323	Washer	墊片	2

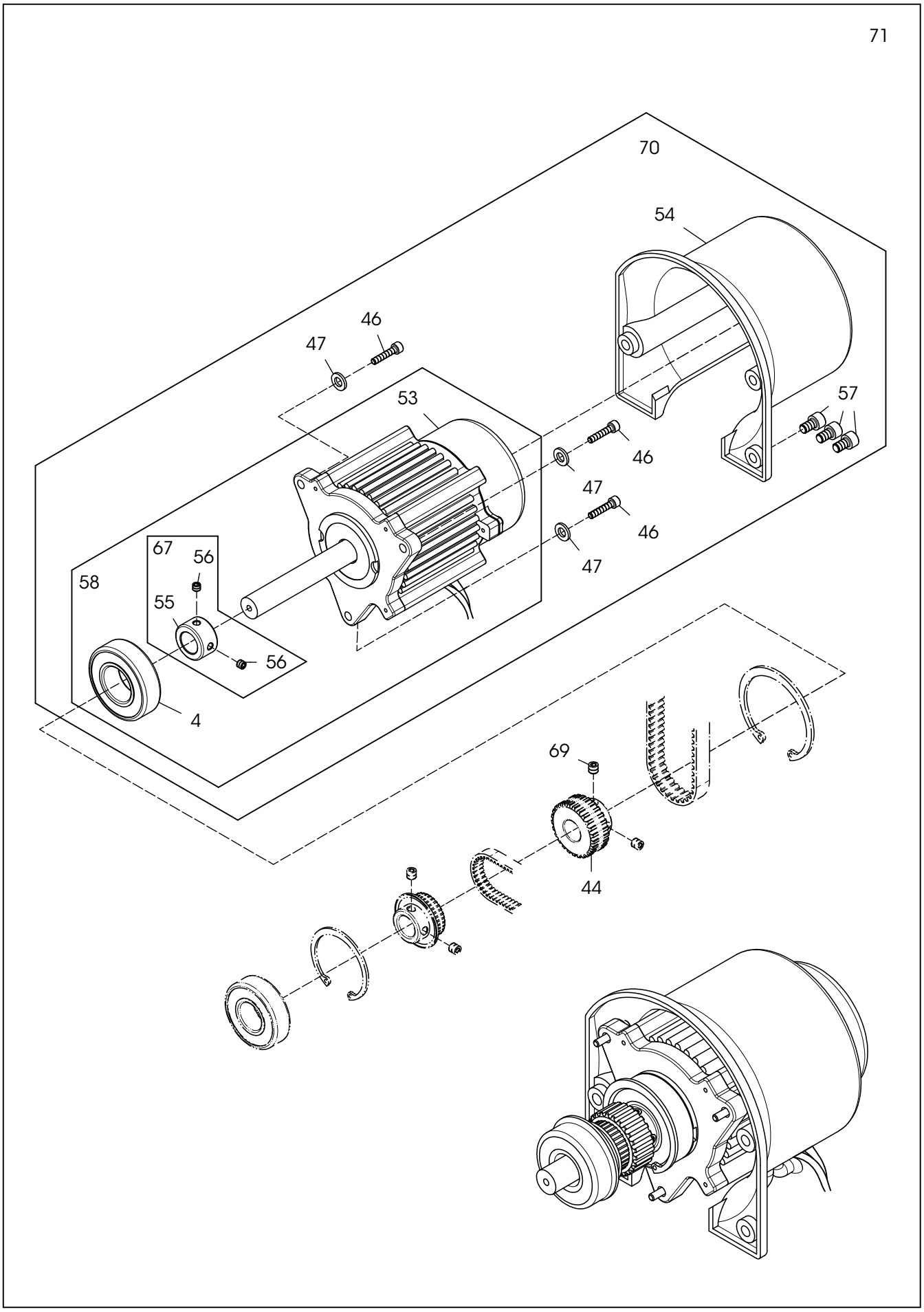
71
70
54
46
47
53
57
46
47
46
47
67
56
58
55
56
4
69
44

MAIN SHAFT DRIVING MECHANISM 下主軸機構組 **5**

Ref. No.	Parts No.	Description	品 名	Amt. Req.
41	07870102	Screw (M4-0.7×12)……	螺絲……	2
42	07870542	Screw (M6-1×6)……	螺絲(尖底)……	3
43	07870543	Screw (M6-1×6)……	螺絲……	5
44	07870544	Main Shaft Sprocket (Lower) ……	下主軸鏈輪……	1
45	07870545	Pulley Bearing C.Set……	皮帶輪培林組件……	1
46	07870546	Screw(M6-1×20)……	螺絲……	3
47	07870547	Washer……	墊片……	3
48	07870548	Oil Pump Driving Worm C.Set……	油泵傳動連桿組件……	1
49	07870549	Counterweight C.Set……	平衡配重凸輪組件……	1
50	07870550	Bearing C.Set……	培林組件……	1
51	07870551	Lower Shaft C.Set……	下傳動軸組件……	1
52	07870552	Lower Crankshaft C.Set……	下曲軸組件……	1
53	07870553	Directly Driving Type Mini-Servo Motor……	直驅式微型伺服馬達……	1
54	07870554	Mini-Servo Motor Cover……	微型伺服馬達蓋……	1
55	07870555	Bushing……	軸套……	1
56	07870556	Screw(M5-0.8×4)……	螺絲……	2
57	07870557	Screw(M6-1×10)……	螺絲……	3
58	07870558	Directly Driving Type Mini-Servo Motor C.Set	直驅式微型伺服馬達組……	1
59	07870559	Washer……	墊片……	1
60	07870560	Wire……	毛根……	1
61	07870561	Thead Take_Up Eyelet Holder C.Set……	底線過線台組……	1
62	07870562	Pin……	插銷……	1
63	07870563	THead Take_Up Eyelet Bracket C.Set……	底線過線組支架組……	1
64	07870564	Looper Thread Tension Post C.Set……	底線張力調整組支柱組……	1
65	07870565	Thead Take_Up Eyelet Holder……	底線過線台……	1
66	07870566	THead Take_Up Eyelet Bracket C.Set……	底線過線組支架……	1
67	07870567	Bushing C.Set……	軸套組……	1
68	07870213	Washer……	墊片……	2
69	07870569	Screw(M6-1×6)……	螺絲(平底)……	1
70	07870570	Directly Driving Type Mini-Servo Motor C.Set	直驅式微型伺服馬達組……	1
71	07870571	Directly Driving Type Mini-Servo Motor C.Set	直驅式微型伺服馬達組……	1

6

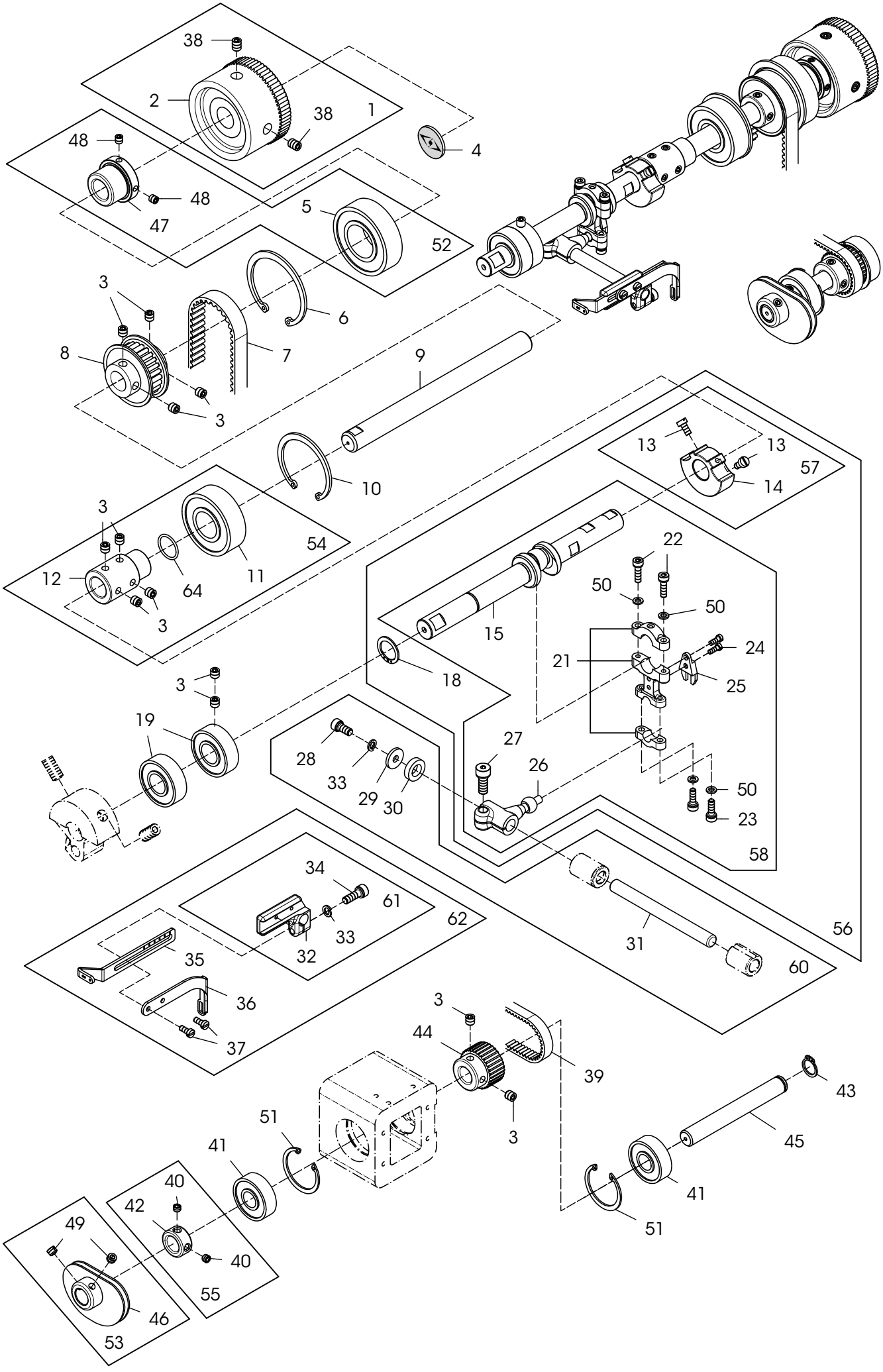

38
2
38
1
4
48
48
47
5
52
3
6
8
7
9
3
10
13
13
57
14
3
54
12
64
11
3
22
50
50
15
24
21
25
18
3
19
27
28
26
33
29
30
50
23
58
34
61
62
33
32
31
56
35
60
36
37
3
44
39
43
51
3
45
41
41
40
42
51
49
40
55
46
53

UPPER SHAFT & NEEDLE THREAD TAKE-UP MECHANISM 上主軸及針線提線諸元 6

Ref. No.	Parts No.	Description	品 名	Amt. Req.
1	07870601	Handwheel C.Set	手推輪組	1
2	07870602	Handwheel	手推輪	1
3	07870543	Screw (M6-1×6)	螺絲	12
4	07870604	Handwheel Mark	手推輪商標銘牌	1
5	07870504	Ball Bearing	滾珠培林	1
6	07870505	Retaining Ring	扣環	1
7	07870607	Timing Belt	同步傳動皮帶	1
8	07870608	Upper Shaft Sprocket	上主軸鏈輪	1
9	07870609	Upper Shaft (Right)	上主傳動軸(右)	1
10	07870507	Retaining Ring	扣環	1
11	07870508	Ball Bearing	滾珠培林	1
12	07870612	Upper Shaft Joint	上主軸接頭	1
13	07870125	Screw (M4-0.7×8)	螺絲	2
14	07870511	Counterweight (Small)	平衡配重凸輪	1
15	07870615	Upper Crankshaft	上曲軸	1
18	07870618	Retaining Ring	扣環	1
19	07870619	Ball Bearing	滾珠培林	2
21	07870621	Connecting Rod	連桿	1
22	07870622	Screw (M4-0.7×14)	螺絲	2
23	07870623	Screw (M4-0.7×12)	螺絲	2
24	07870624	Screw (1/8-44×7.3)	螺絲	2
25	07870625	Guide Fork	叉形導片	1
26	07870626	Driving Lever	傳動桿	1
27	07870627	Screw (M6-1×15)	螺絲	1
28	07870628	Screw (M5-0.8×10)	螺絲	1
29	07870629	Washer	墊片	1
30	07870630	Spacer	襯套	1
31	07870631	Driving Shaft	傳動軸	1
32	07870632	Bracket	托架	1
33	07870633	Spring Washer	彈性墊片	2
34	07870634	Screw (M5-0.8×14)	螺絲	1
35	07870635	Needle Thread Take-up	針線提線過線桿(三針五線用)	1
36	07870636	Top Cover Thread Take-up	上飾線提線過線桿	1
37	07870637	Screw (M3.5-0.6×8)	螺絲	2
38	07870503	Screw(M6-1×8)	螺絲	2
39	07870639	Timing Belt	時規皮帶	1
40	07870556	Screw (M5-0.8×4)	螺絲	2

6

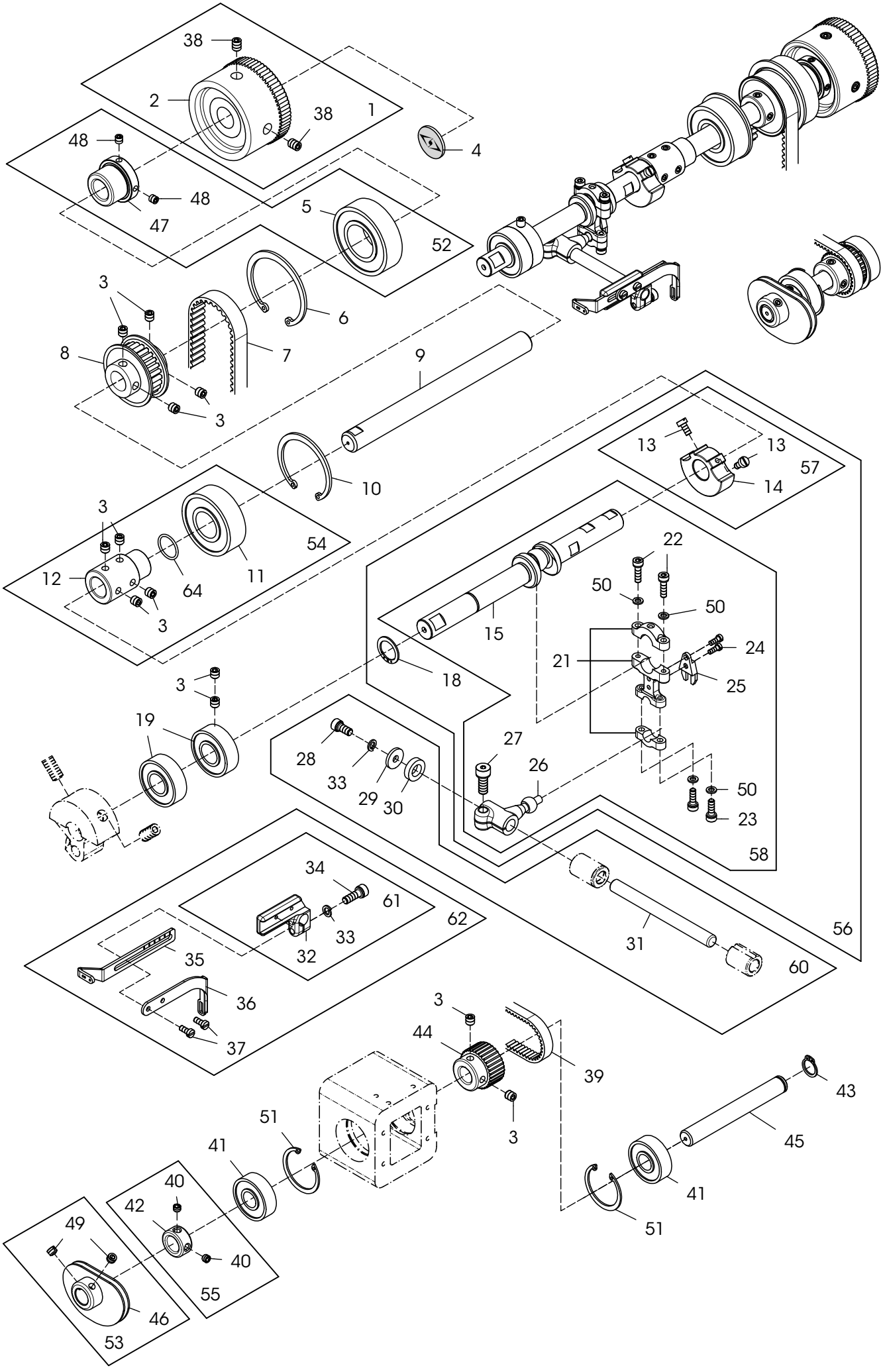

38
2
38
1
4
48
48
47
5
52
3
6
8
7
9
3
10
13
13
57
14
3
54
12
64
11
3
22
50
50
15
24
21
25
18
3
19
27
28
26
33
29
30
50
23
58
34
61
62
33
32
31
56
35
60
36
37
3
44
39
43
51
3
45
41
41
40
42
51
49
40
55
46
53

UPPER SHAFT & NEEDLE THREAD TAKE-UP MECHANISM 上主軸及針線提線諸元 6

Ref. No.	Parts No.	Description	品 名	Amt. Req.
41	07870641	Ball Bearing	滾珠軸承	2
42	07870642	Adapter	接頭	1
43	07870643	Retaining Ring	扣環	1
44	07870644	Looper Theread Take-up Shaft Sprocket	分線盤主傳動軸鏈輪	1
45	07870645	Looper Thread Take-up Shaft	分線盤傳動軸	1
46	07870646	Looper Thread Take-up	底線挑線凸輪	1
47	07870647	Handwheel Adapter	手推輪轉軸套	1
48	07870648	Screw (M5-0.8×5)	螺絲	2
49	07870649	Screw (7/32-32×4.5)	螺絲	2
50	07870650	Washer	墊片	4
51	07870651	Retaining Ring	扣環	2
52	07870652	Handwheel Adapder Bearing C.Set	手推輪轉軸套培林組	1
53	07870653	Looper Thead Take-Up C.Set	底線挑線凸輪組	1
54	07870654	Upper Shaft Adapder Bearing C.Set	上主軸接頭培林組	1
55	07870655	Adapder C.Set	接頭組	1
56	07870656	Upper Crankshaft Counterweight C.Set	上曲軸配重組	1
57	07870657	Counterweight C.Set	平衡配重凸輪組	1
58	07870658	Upper Crankshaft C.Set	上曲軸組	1
60	07870660	Driving Shaft C.Set	傳動軸組	1
61	07870661	Bracket C.Set	托架組	1
62	07870662	Top Cover Thread C.Set	上飾線提線組	1
64	07870664	O-ring	O環	1

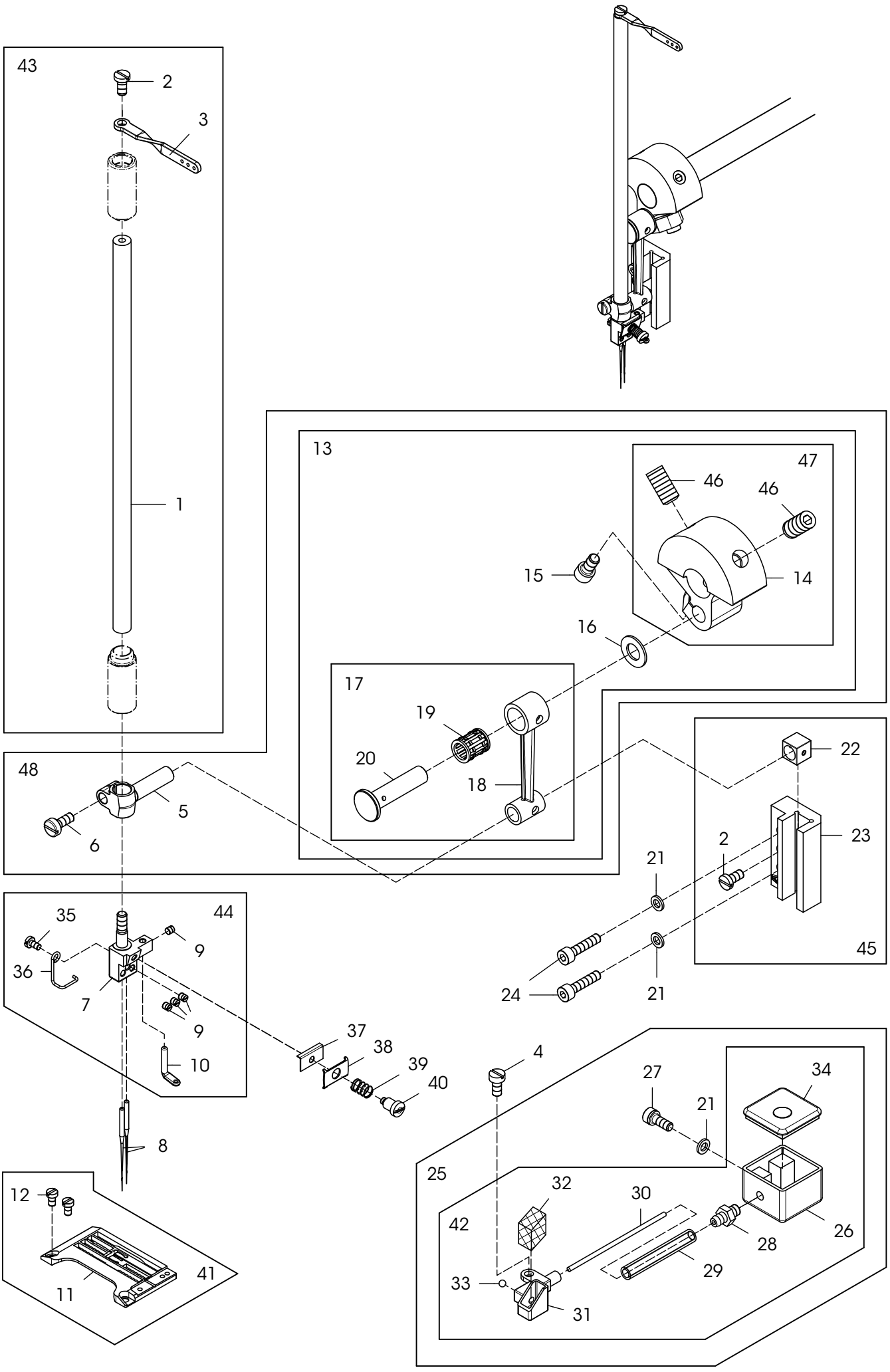
43
2
3
1
13
47
46
46
15
14
16
17
19
20
18
48
5
6
22
23
2
21
24
21
45
44
35
9
36
7
9
10
37
38
39
40
4
27
21
34
25
32
30
42
28
26
29
33
31
8
12
11
41

NEEDLE BAR MECHANISM 針柱機構 **7**

Ref. No.	Parts No.	Description	品 名	Amt. Req.
1	07870701	Needle Bar	針柱	1
2	07870702	Screw (9/64-40×8)	螺絲	2
3	07870703	Needle Bar Thread Eyelet	針柱頂過線桿(三針五線用).	1
4	07870125	Screw (M4-0.7×8)	螺絲	1
5	07870705	Needle Bar Bracket	針柱托架	1
6	07870120	Screw (M4-0.7×10)	螺絲	1
7	★	Needle Clamp	針鎦	1
8	07870708	Needle (UY128 GAS)	擊針	3
9	07870319	Screw (1/8-44×3)	鎖針螺絲	4
10	07870710	Top Cover Thread Eyelet	上飾線過線片	1
11	★	Stitch Plate	針板	1
12	07870712	Screw (M3-0.5×5)	針板螺絲	2
13	07870713	Counterweight, Complete Set	平衡配重凸輪組	1
14	07870714	Counterweight	平衡配重凸輪	1
15	07870628	Screw (M5-0.8×10)	螺絲	1
16	07870716	Connecting Rod Ring	連桿套環	1
17	07870717	Connecting Rod,Complete Set	連桿組	1
18	07870718	Connecting Rod	連桿	1
19	07870719	Roller Bearing	培林	1
20	07870720	Connecting Rod Pin	連桿插銷	1
21	07870650	Washer	墊片	3
22	07870722	Slide Block	針柱定位滑塊	1
23	07870723	Needle Bar Guide	針柱定位滑槽	1
24	07870724	Screw (M4-0.7×18)	螺絲	2
25	07870725	HR Device, Complete	擊針冷卻裝置	1
26	07870726	HP Container	矽油儲存槽	1
27	07870202	Screw(M4-0.7×10)	螺絲	1
28	07870728	Pipe Joint	油管接頭	1
29	07870729	Oil Tube	給油管	1
30	07870730	Felt	油蕊	1
31	07870731	HP Cup	矽油杯	1
32	07870732	HP Felt	吸油棉	1
33	07870733	Sealing Plug	封閉塞	1
34	07870734	HP Container Cover	矽油槽膠蓋	1
35	07870221	Screw (M2.6-0.45×5)	螺絲	1
36	07870736	Needle Thread Guiding Wire	針線過線鐵線	1
37	07870737	Thread Retainer Disc Support	針線張力調整壓板固定座(小)...	1
38	07870738	Needle Thread Retainer Dice	針線張力調整壓板(小)	1
39	07870739	Needle Thread Retainer Spring	針線張力調整彈簧	1

★ 請參照附件一、附件二【標準規格件】

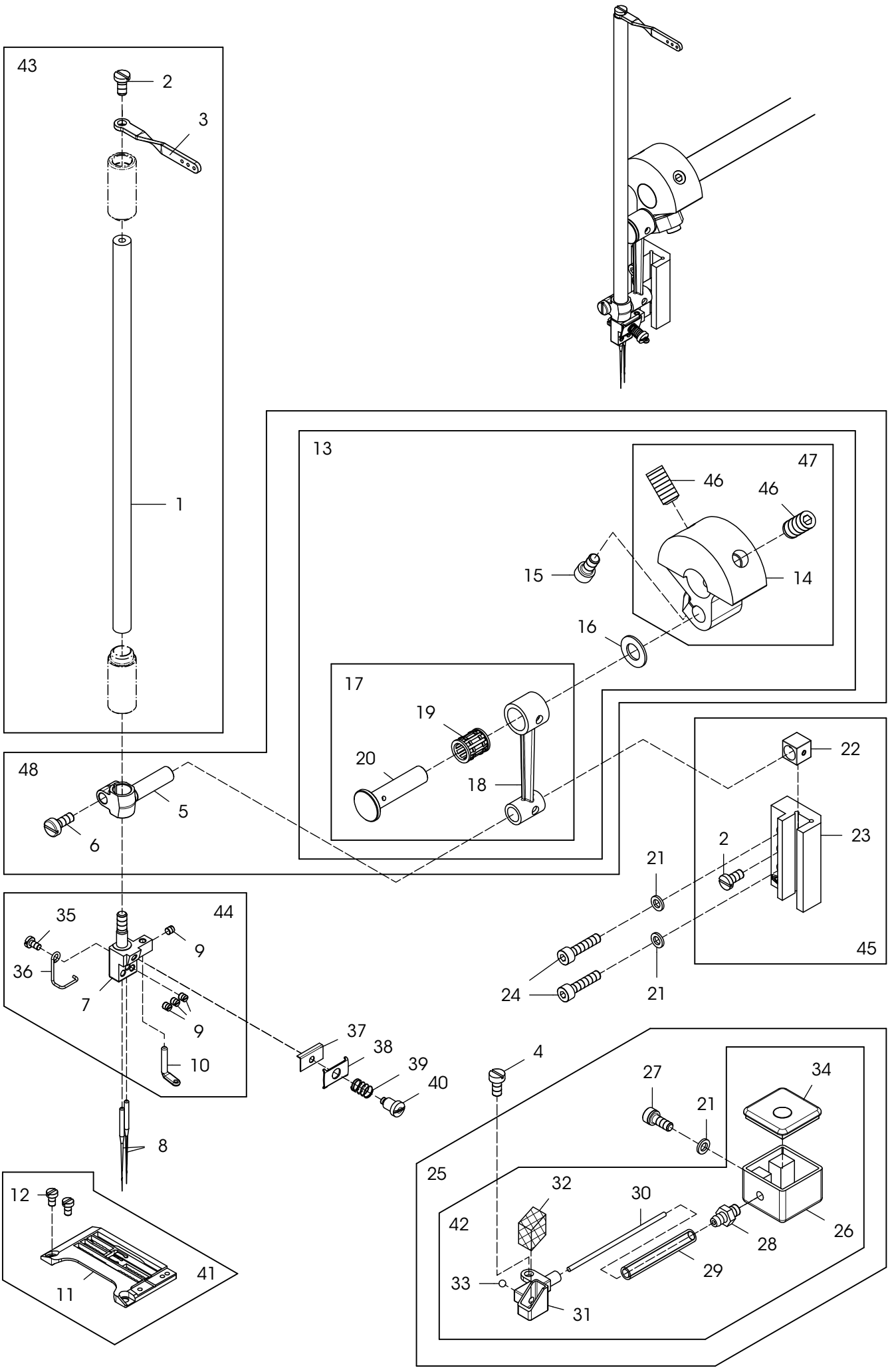
43
2
3
1
13
47
46
46
15
14
16
17
19
20
18
48
5
6
22
23
2
21
24
21
45
44
35
9
36
7
9
10
37
38
39
40
4
27
21
34
25
32
30
42
28
26
29
33
31
8
12
11
41

Ref. No.	Parts No.	Description	品 名	Amt. Req.
40	07870740	Screw (1/8-44×2.5)……	螺絲……	1
41	07870741	Stitch Plate C.Set……	針板組件……	1
42	07870742	SP Container C.Set……	矽油槽組件……	1
43	07870743	Needle Bar Thread Eyelet C.Set……	針柱頂過線桿組……	1
44	07870744	Top Cover Thread Needle Clamp C.Set……	上飾過線針餾組……	1
45	07870745	Needle Bar Pinpoint C.Set……	針柱定位組件……	1
46	07870746	Screw(M8-1.25×16)……	螺絲……	2
47	07870747	Counterweight C.Set……	平衡配重凸輪組……	1
48	07870748	Counterweight Connecting Rod C.Set……	平衡配重凸輪連桿組……	1

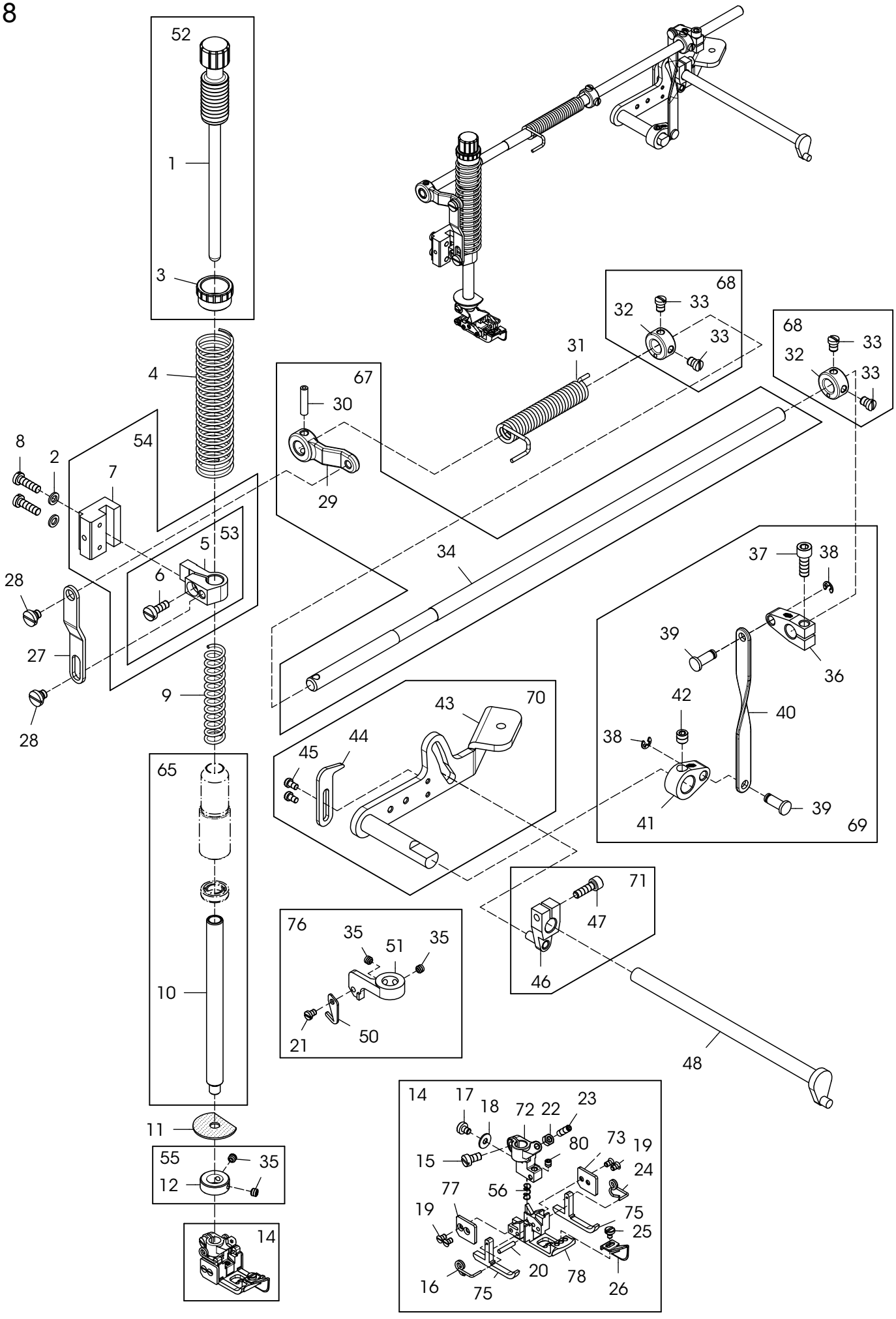
52
1
3
4
54
8
2
7
53
5
6
28
27
28
9
65
10
11
55
35
12
14
67
30
29
31
68
32
33
33
68
32
33
33
34
37
38
39
36
42
40
38
41
39
69
43
70
44
45
71
47
46
48
76
35
51
35
21
50
14
17
18
72
22
23
80
73
19
15
24
77
56
19
75
25
16
75
20
78
26

PRESSER FOOT MECHANISM 壓腳機構 **8**

Ref. No.	Parts No.	Description	品　　名	Amt. Req.
1	07870801	Presser Spring Regulator	壓腳彈簧調節器	1
2	07870650	Washer	墊片	2
3	07870803	Lock Nut	併緊螺帽	1
4	07870804	Presser Bar Spring (Outer)	壓腳棒狀彈簧 (外)	1
5	07870805	Presser Bar Connecting Bracket	壓腳推桿連結架	1
6	07870806	Screw (11/64-40×10)	螺絲	1
7	07870807	Presser Bar Guide	壓腳推桿導架	1
8	07870622	Screw (M4-0.7×14)	螺絲	2
9	07870809	Presser Bar Spring (Inner)	壓腳棒狀彈簧 (內)	1
10	07870810	Presser Bar	壓腳推桿	1
11	07870811	Oil Protector Ring	止油環	1
12	07870812	Collar	軸環	1
14	★	Presser Foot, Complete Set	壓腳組	1
15	07870815	Screw (9/64-40×8)	螺絲	1
16	07870816	Presser Foot Spring (Left)	壓腳彈簧(左)	1
17	07870817	Screw (1/8-44×3.5)	螺絲	1
18	07870818	Washer	墊片	1
19	07870819	Screw (3/32-56×5)	螺絲	4
20	07870820	Presser Foot Hinge Pin	壓腳鎖閂插銷	1
21	07870821	Screw (1/8-44×4)	螺絲	1
22	07870822	Lock Nut	保險螺帽	1
23	07870823	Adjusting Screw (1/8-44×10)	可調螺絲	1
24	07870824	Presser Foot Spring (Right)	壓腳彈簧(右)	1
25	07870825	Screw (3/22-56×3.5)	螺絲	1
26	07870826	Fabric Guide (Long)	壓腳舌 (長)	1
27	07870827	Lifter Link	提升連桿	1
28	07870828	Screw (3/16-32×2.2)	螺絲	2
29	07870829	Lifter Link Lever	提升連結拉柄	1
30	07870830	Fastener Pin	固定銷	1
31	07870831	Lifter Spring	提升彈簧	1
32	07870832	Collar (8×16×8mm)	軸環	2
33	07870833	Screw (M4.5-0.75×5.5)	螺絲	4
34	07870834	Lifter Shaft	壓腳提升主軸	1
35	07870229	Screw (M4-0.7×3)	螺絲	4
36	07870836	Intermediate Lever	中間拉柄	1
37	07870634	Screw (M5-0.8×14)	螺絲	1
38	07870838	Retaining Ring	扣環	2
39	07870839	Connecting Pin	連結銷	2
40	07870840	Connecting Plate	連結拉板	1

★ 請參照附件一、附件二【標準規格件】

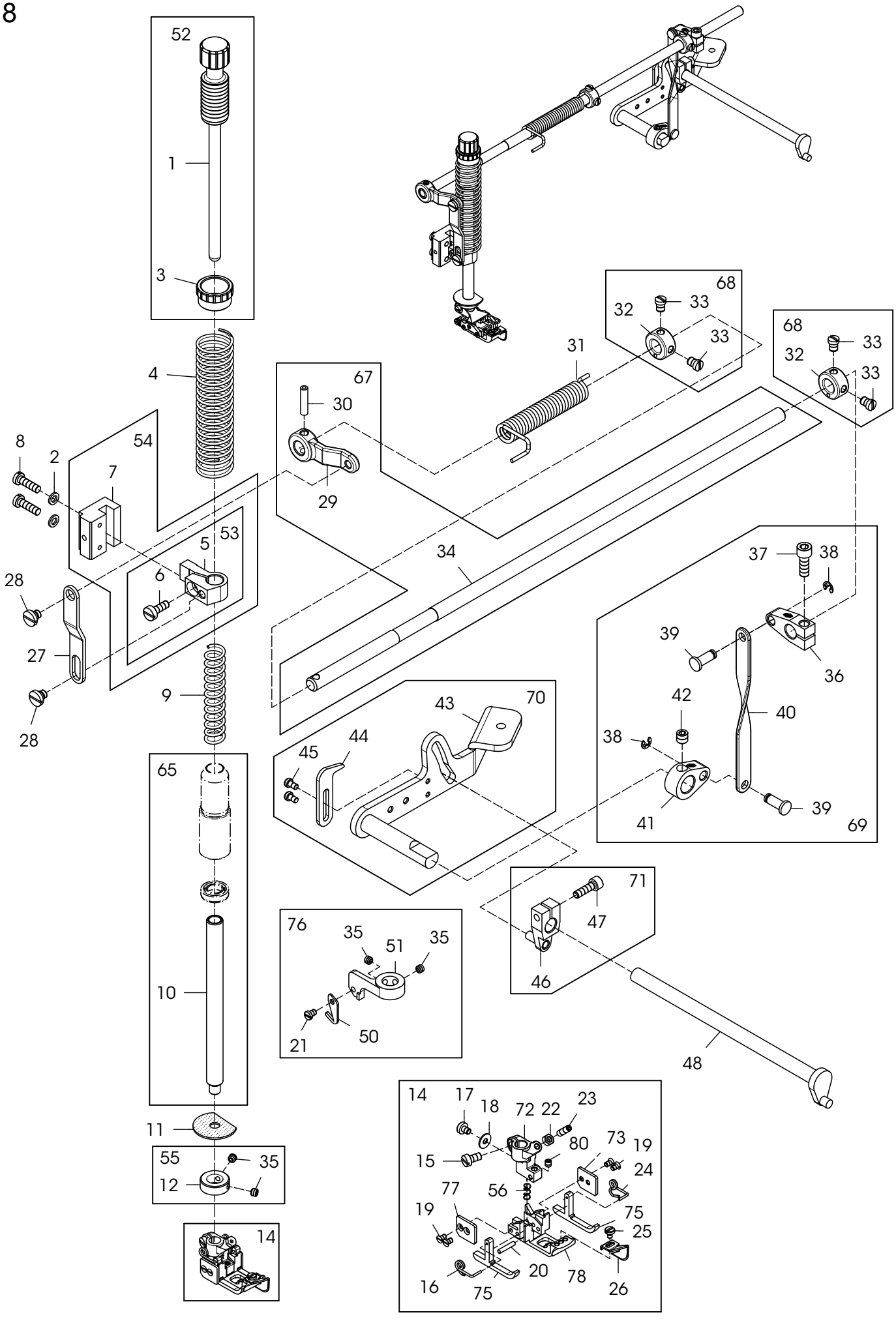
52
1
3
4
54
8
2
7
53
5
6
28
27
28
9
65
10
11
55
35
12
14
67
30
29
31
68
32
33
33
68
32
33
33
34
37
38
39
36
42
40
38
41
39
69
43
70
44
45
71
47
46
48
76
35
51
35
21
50
14
17
18
72
22
23
80
73
19
15
24
77
56
19
75
25
16
75
20
78
26

PRESSER FOOT MECHANISM 壓腳機構 **8**

Ref. No.	Parts No.	Description	品　　名	Amt. Req.
41	07870841	Lifter Lever (Small).....	提升拉柄(小).....	1
42	07870543	Screw (M6-1×6).....	螺絲.....	1
43	07870843	Lifter Lever.....	提升拉柄.....	1
44	07870844	Lifter Lever Stop.....	提升拉柄止塊.....	1
45	07870845	Screw (9/64-40×6).....	螺絲.....	2
46	07870846	Tension Release Lever.....	拉力釋放槓桿.....	1
47	07870847	Screw (11/64-40×14).....	螺絲.....	1
48	07870848	Tension Release Shaft.....	拉力釋放軸.....	1
50	07870850	Cutter.....	割線刀.....	1
51	07870851	Cutter Holder.....	割線刀座.....	1
52	07870852	Presser Spring Regulator C.Set.....	壓腳彈簧調節器組.....	1
53	07870853	Presser Bar Connection Braxket C.Set.....	壓腳推桿連結組.....	1
54	07870854	Presser Bar C.Set.....	壓腳推桿組.....	1
55	07870855	Collar C.Set.....	軸環組.....	1
56	07870856	Presser Foot Spring.....	壓腳彈簧.....	1
65	07870865	Presser Bar C.Set.....	壓腳推桿組.....	1
67	07870867	Lifter Link Lever C.Set.....	提升連結拉桿組.....	1
68	07870868	Collar C.Set.....	軸環組.....	2
69	07870869	Connection Plate C.Set.....	連結拉板組.....	1
70	07870870	Lifter Lever C.Set.....	提升拉柄組.....	1
71	07870871	Tension Release Lever C.Set.....	拉力釋放槓桿組.....	1
72	07870872	Presser Head.....	壓腳頭.....	1
73	07870873	Fender Plate.....	擋片.....	1
75	07870875	Sideways Presser Plate.....	側邊壓板.....	2
76	07870876	Cutter Holder C.Set.....	割線刀座組.....	1
77	07870877	Fender Plate.....	擋片.....	1
78	07870878	Presser Foot Noumenon	壓腳本體.....	1
80	07870880	Screw (M3-0.5×3).....	螺絲.....	1

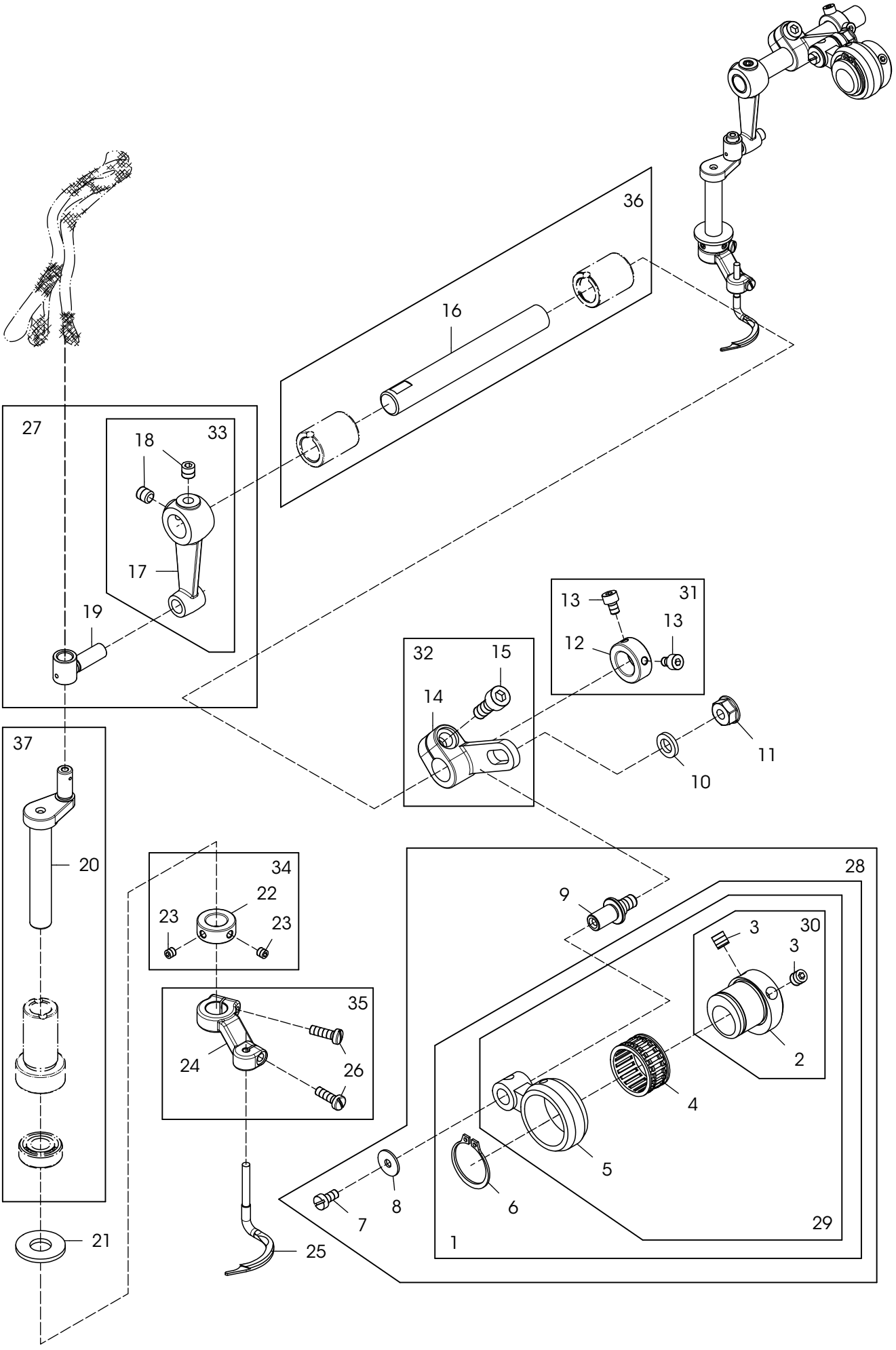
36
16
27
18
33
17
19
13
31
13
12
32
15
14
11
10
37
20
34
22
23
23
35
24
26
28
9
3
30
3
2
4
5
6
8
7
29
1
21
25

SPREADER MECHANISM 上飾線驅動機構 **9**

Ref. No.	Parts No.	Description	品 名	Amt. Req.
1	07870901	Connecting Rod, Complete Set	連桿組	1
2	07870902	Eccentric	偏心輪	1
3	07870503	Screw (M6-1×8)	螺絲	2
4	07870904	Roller Bearing	滾珠培林	1
5	07870905	Connecting Rod	連桿	1
6	07870906	Retaining Ring	扣環	1
7	07870125	Screw (M4-0.7×8)	螺絲	1
8	07870908	Washer	墊片	1
9	07870909	Adjusting Lever Pin	拉柄可調式插銷	1
10	07870547	Washer	墊片	1
11	07870911	Nut (M6-1.0)	螺帽	1
12	07870912	Collar (12×20×8mm)	軸環	1
13	07870913	Screw (M4-0.7×6)	螺絲	2
14	07870914	Adjusting Lever	可調式拉柄	1
15	07870915	Screw (M6-1×16)	螺絲	1
16	07870916	Driving Shaft	主動軸	1
17	07870917	Rocking Arm	搖臂	1
18	07870543	Screw (M6-1×6)	螺絲	2
19	07870919	Rocking Pin	支點銷	1
20	07870920	Spreader Bar	延展臂	1
21	07870921	Bushing Ring	襯環	1
22	07870922	Collar (10×18×7mm)	軸環	1
23	07870229	Screw (M4-0.7×4)	螺絲	2
24	07870924	Spreader Holder	上勾固定座	1
25 ★	07870925	Spreader	上勾	1
26	07870102	Screw (M4-0.7×12)	螺絲	2
27	07870927	Needle Bar Rocking Arm, Complete Set	針棒搖臂組	1
28	07870928	Spreader Needle Eccentric C.Set	上勾針偏心輪組	1
29	07870929	Eccentric Connecting Rod Bearing C.Set	偏心輪連桿培林組	1
30	07870930	Eccentric C.Set	偏心輪組	1
31	07870931	Collar C.Set	軸環組	1
32	07870932	Adjusting Lever C.Set	可調式拉柄組	1
33	07870933	Rocking Arm C.Set	搖臂組	1
34	07870934	Collar C.Set	軸環組	1
35	07870935	Spreader Holder C.Set	上勾固定座組	1
36	07870936	Driving Shaft C.Set	主動軸組	1
37	07870937	Spreader Bar	廷展臂組	1

★ 請參照附件一、附件二【標準規格件】

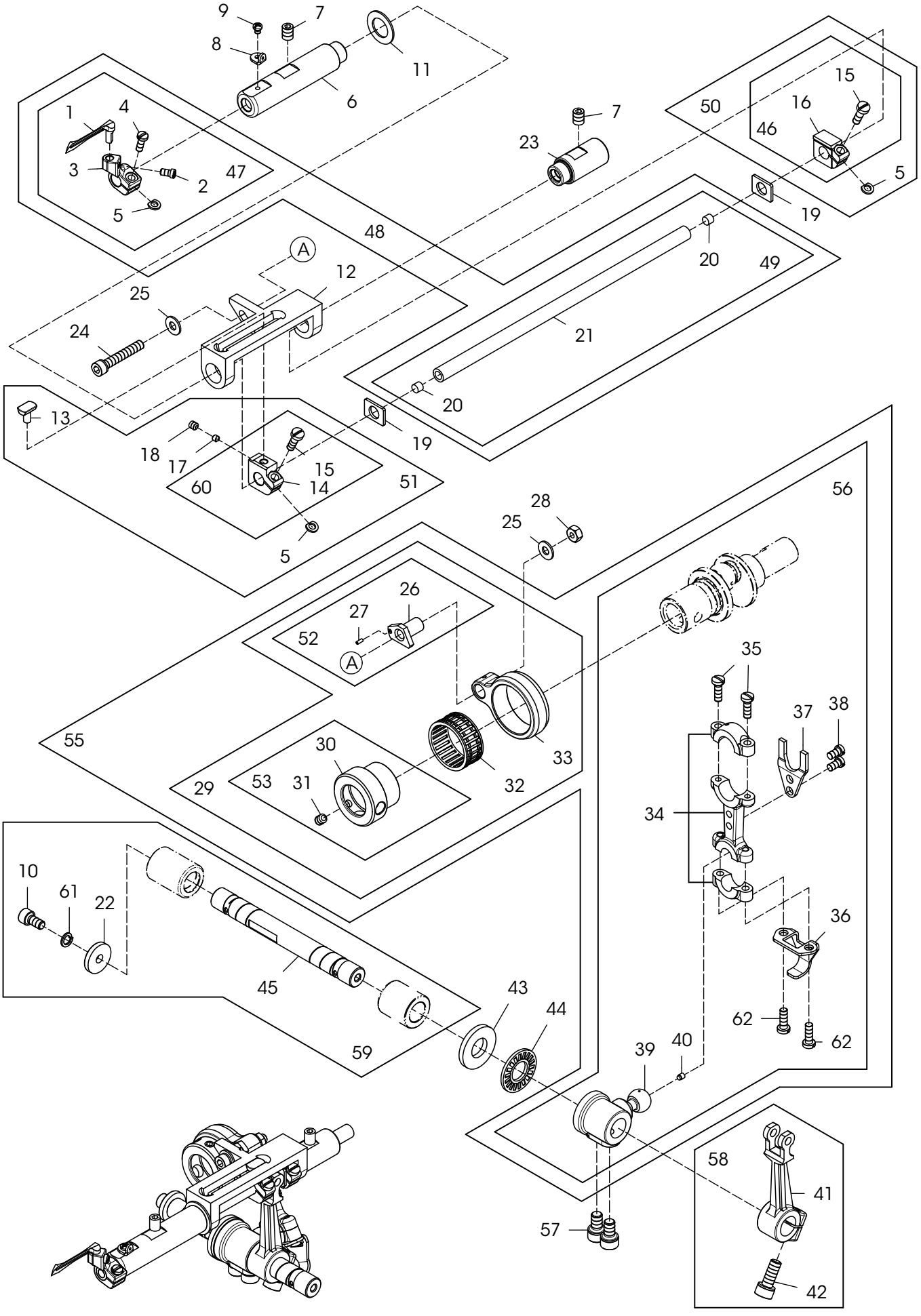
9
7
8
11
6
1
4
3
2
47
5
7
23
50
15
16
46
5
19
48
A
12
25
24
20
49
21
20
13
19
18
17
15
60
14
51
5
56
28
25
26
27
52
A
35
37
38
55
30
33
29
53
31
32
34
10
61
22
36
45
43
44
62
62
59
39
40
58
41
57
42

LOOPER DRIVING MECHANISM 下勾針驅動機構 **10**

Ref. No.		Parts No.	Description	品　　名	Amt. Req.
1	★	07871001	Looper	下勾針	1
2		07871002	Screw (M3.5-0.6×6)	螺絲	1
3		07871003	Looper Holder	下勾針固定座	1
4		07871004	Screw (M3.5-0.6×10)	螺絲	1
5		07871005	Spacer (Fiber)	墊片	3
6		07871006	Looper Bar Bushing	下勾針驅動軸襯套	1
7		07870503	Screw (M6-1×8)	螺絲	2
8		07870537	Looper Thread Eyelet	勾針線過線孔	1
9		07870210	Screw (M3-0.5×3)	螺絲	1
10		07870628	Screw(M5-0.8×10)	螺絲	1
11		07871011	Bushing Spacer	襯套墊片	1
12		07871012	Looper Bar Guide	下勾針驅動軸導槽	1
13		07871013	Slider	滑塊	1
14		07871014	Slider Holder	滑塊固定座	1
15		07870102	Screw (M4-0.7×12)	螺絲	2
16		07871016	Rocker Arm, Holder	搖臂夾座	1
17		07871017	SliderPresser	滑塊定位壓塊	1
18		07870229	Screw (M4-0.7×4)	螺絲	1
19		07871019	Thrust Washer	止推墊圈	2
20		07871020	Sealing Plug	封閉塞	2
21		07871021	Looper Bar	下勾針棒	1
22		07871022	Washer	墊片	1
23		07871023	Looper Bar Guide Shaft	下勾針棒導軸	1
24		07871024	Screw (M5-0.8×30)	螺絲	1
25		07871025	Washer	墊片	2
26		07871026	Looper Rocker Adjusting Pin	下勾針搖臂調整銷	1
27		07871027	Roll Pin	輥子銷	1
28		07871028	Nut	螺帽	1
29		07871029	Looper Rocker Eccentric C. Set	下勾針搖臂偏心輪組	1
30		07871030	Looper Rocker Regulating Eccentric	下勾針搖臂可調偏心輪	1
31		07870648	Screw (M5-0.8×5)	螺絲	1
32		07871032	Roller Bearing	滾針軸承	1
33		07871033	Looper Rocker Connecting Rod	下勾針搖臂連桿	1
34		07871034	Looper Connecting Rod	下勾針連桿	1
35		07870120	Screw (M4-0.7×14)	螺絲	2
36		07871036	Oil Splasher	撥油片	1
37		07871037	Guide Fork	定位叉	1
38		07871038	Screw (11/64-40×8.3)	螺絲	2
39		07871039	Looper Driving Lever	下勾針驅動桿	1

★ 請參照附件一、附件二【標準規格件】

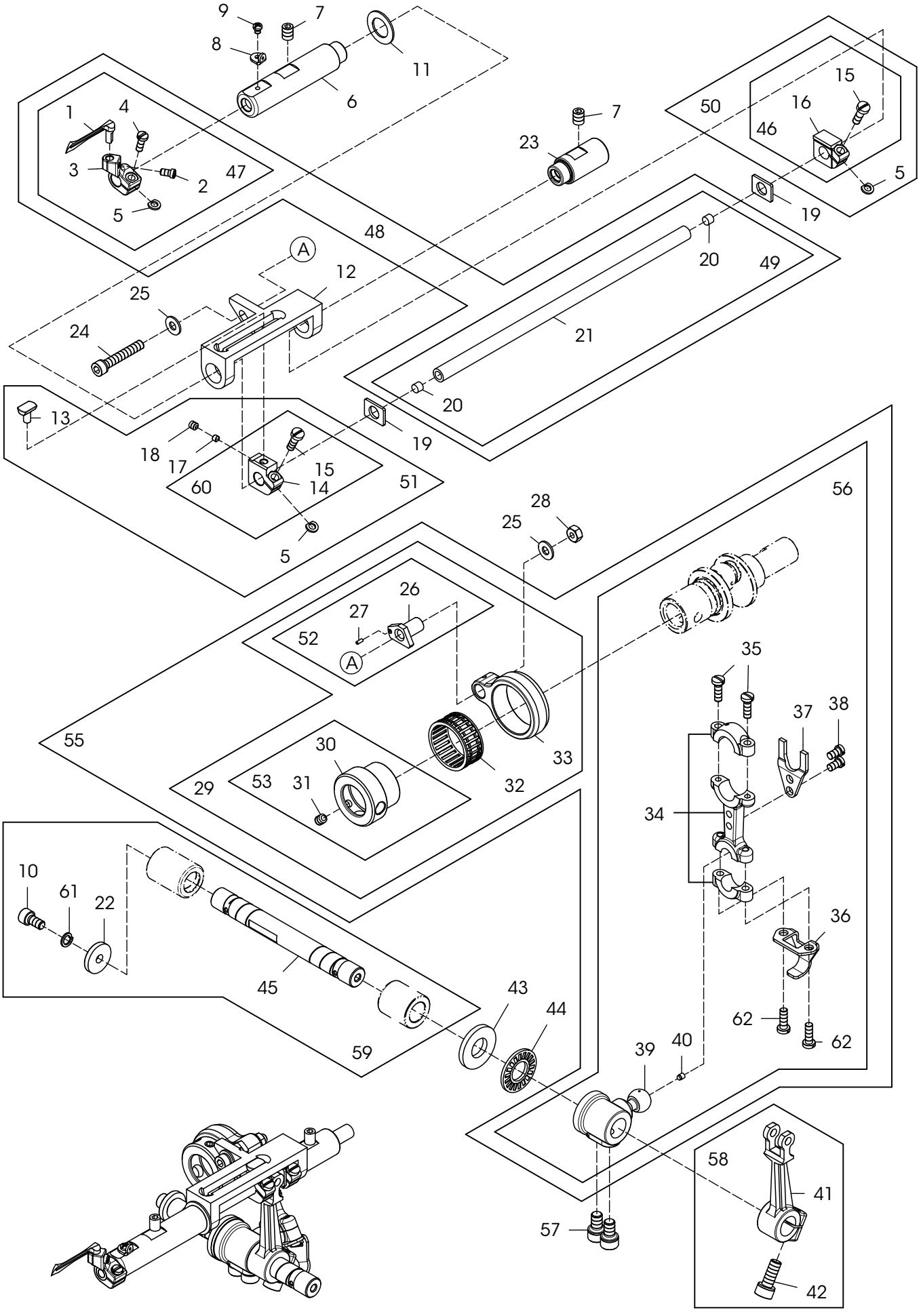
9
7
8
11
6
1
4
3
2
47
5
7
23
50
15
16
46
5
19
48
A
12
25
24
20
49
21
20
13
19
18
17
15
60
14
51
5
56
28
25
26
27
52
A
35
37
38
55
30
33
29
53
31
32
34
10
61
22
36
45
43
44
62
62
59
39
40
58
41
57
42

LOOPER DRIVING MECHANISM 下勾針驅動機構 **10**

Ref. No.	Parts No.	Description	品 名	Amt. Req.
40	07871040	Seal Plug	封塞	1
41	07871041	Looper Rocker Arm	下勾針搖臂	1
42	07871042	Screw (M6-0.75×15)	螺絲	1
43	07871043	Thrust Plate	推力板	1
44	07871044	Thrust Roller Bearing	推力滾珠培林	1
45	07871045	Looper Shaft	下勾針主軸	1
46	07871046	Rocker Arm, Holder	搖臂夾座	1
47	07871047	Looper Holder C.Set	下勾針固定座組	1
48	07871048	Looper C.Set	下勾針組	1
49	07871049	Looper Bar C.Set	下勾針棒組	1
50	07871050	Rocker Arm, Holder C.Set	搖臂夾座組	1
51	07871051	Slider Holder C.Set	滑塊固定座組	1
52	07871052	Looper Rocker Adjustion Pin C.Set	下勾針搖臂調整銷組	1
53	07871053	Looper Rocker Arm Eccentric	下勾針搖臂偏心輪組	1
55	07871055	Looper Rocker Connecting Rod. C.Set	下勾針搖臂連桿組	1
56	07871056	Looper Driving Lever C.Sett	下勾針驅動桿組	1
57	07870557	Screw(M6-1.0×10)	螺絲	2
58	07871058	Looper rocker Arm C.Set	下勾針搖臂組	1
59	07871059	Looper Shaft C.Set	下勾針主軸組	1
60	07871060	Silder Holder	滑塊固定座	1
61	07870633	Spring Washer	彈簧墊片	1
62	07870622	Screw(M4-0.7×14)	螺絲	2

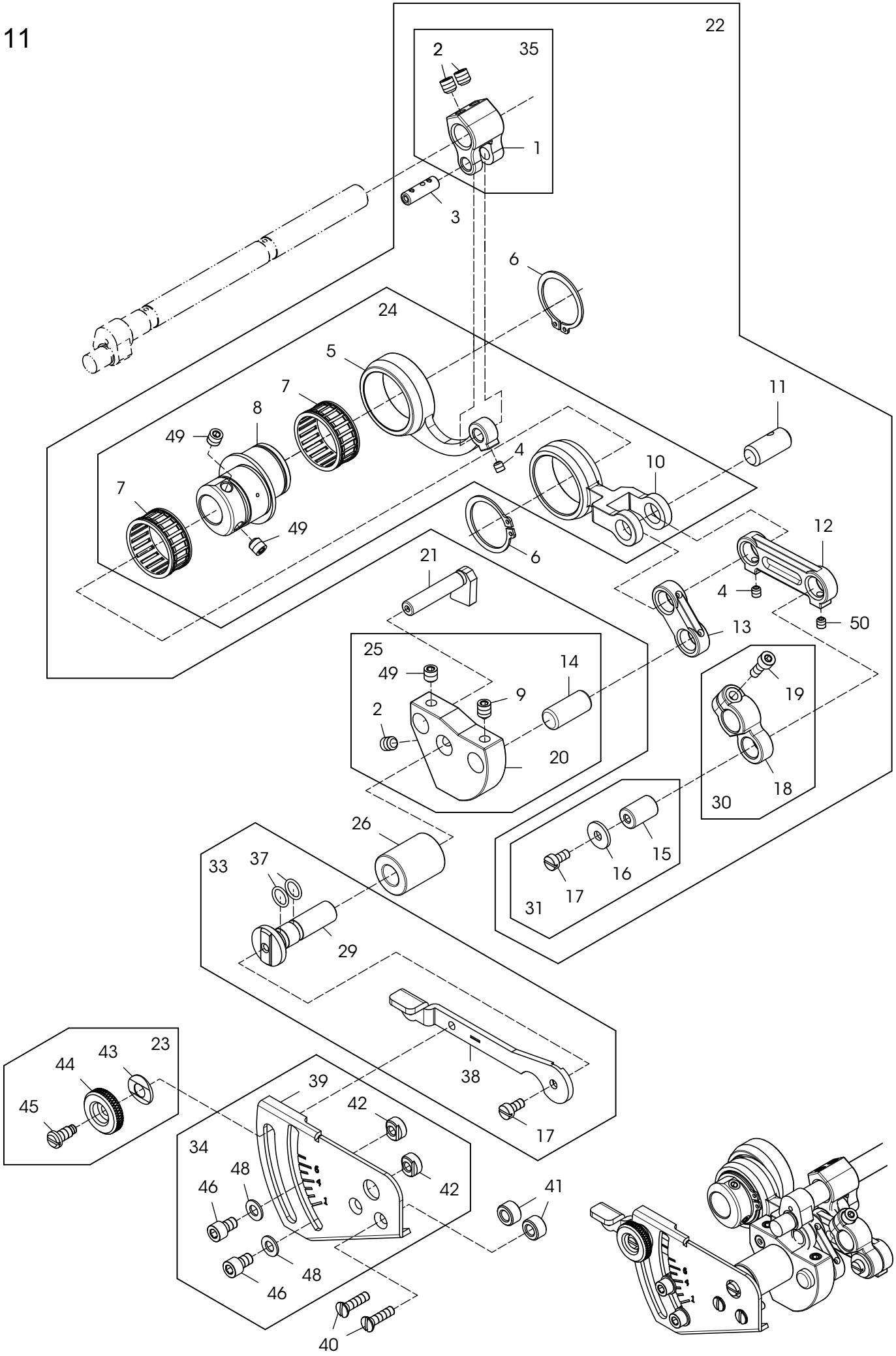
22
2
35
1
3
6
24
5
7
8
49
4
10
11
12
21
13
50
25
14
9
20
19
18
30
26
33
37
29
15
16
17
31
38
23
44
43
45
39
42
34
48
46
41
40

Ref. No.	Parts No.	Description	品 名	Amt. Req.
1	07871101	Feed Lift Lever	送料具提升桿	1
2	07870543	Screw (M6-1×6)	螺絲	3
3	07871103	Connecting Rod Pin	連桿插銷	1
4	07870229	Screw (M4-0.7×4.5)(尖頭)	螺絲	2
5	07871105	Feed Lift Connecting Rod	送料具提升連桿	1
6	07871106	Retaining Ring	扣環	2
7	07871107	Roller Bearing	滾珠培林	2
8	07871108	Feed Eccentric	送料具偏心輪	1
9	07870542	Screw (M6-1×6)	螺絲(尖底)	1
10	07871110	Feed Connecting Rod	送料具連桿	1
11	07871111	Connecting Rod Pin	連桿插銷	1
12	07871112	Lever Link (Long)	提環桿 (長)	1
13	07871113	Lever Link (Short)	提環桿 (短)	1
14	07871114	Connecting Rod Link Pin	連桿插銷	1
15	07871115	Lever Link Pin	提環桿插銷	1
16	07870908	Washer	墊片	1
17	07870125	Screw (M4-0.7×8)	螺絲	2
18	07871118	Feed Shaft Lever	進給軸拉柄	1
19	07870623	Screw (M4-0.7×12)	螺絲	1
20	07871120	Control Bracket	控制架	1
21	07871121	Connecting Rod Guide	連桿導軸	1
22	07871122	Feed Lift Connectiog Rod C.Set	送料具提升連桿組	1
23	07871123	Spring Cap C.Set	調鈕組	1
24	07871124	Feed Eccentic C.Set	送料具偏心輪組	1
25	07871125	Control Bracket C.Set	控制架組	1
26	07871126	Control Lever Shaft Bushing	控制槓桿軸襯套	1
29	07871129	Control Lever Shaft	控制橫桿主軸	1
30	07871130	Feed Shaft Lever C.Set	進給軸拉柄組	1
31	07871131	Lever Link Pin C.Set	提環桿插銷組	1
33	07871133	Control Lever Shaft C.Set	控制槓桿主軸組	1
34	07871134	Feed Graduations C.Set	針距尺寸刻度板組	1
35	07871135	Feed Lift Lever C.Set	送料具提升桿組	1
37	07871137	O-ring	O環	2
38	07871138	Feed Control Lever	送料具控制桿	1
39	07871139	Feed Graduations	針距尺寸刻度板	1
40	07871140	Screw (M4-0.7×14.5)	螺絲	2
41	07871141	Spacer	墊塊	2
42	07871142	Control Lever Stop	控制槓桿止塊	2
43	07871143	Conical Spring Washer	錐形彈簧墊片	1
44	07871144	Spring Cap	調鈕	1
45	07871145	Screw (M6-1×7.5, M4.5-0.5×3)	螺絲	1
46	07871146	Screw (M5-0.8×8)	螺絲	2
48	07871148	Washer	墊片	2
49	07870503	Screw (M6-1×8)	螺絲	3
50	07870229	Screw (M4-0.7×4)	螺絲	1

12

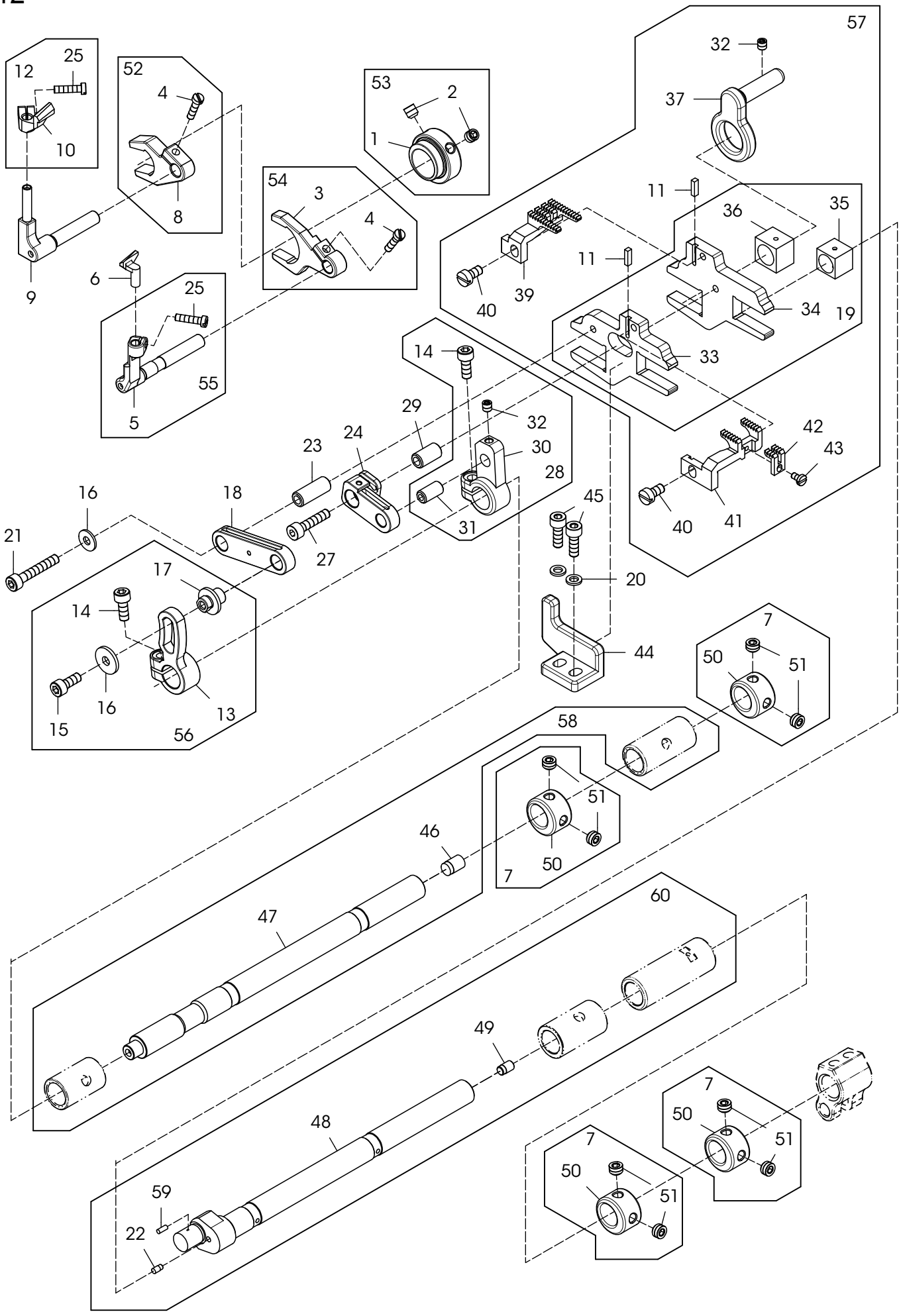

57
32
37
12
25
10
52
4
8
53
2
1
54
3
4
11
36
35
11
39
40
34
19
9
6
25
55
5
14
33
29
32
30
28
23
24
42
43
16
18
45
21
27
31
40
41
17
20
14
44
7
50
51
16
13
15
56
58
51
46
50
7
60
47
49
7
50
51
48
7
50
51
59
22

Ref. No.		Parts No.	Description	品 名	Amt. Req.
1		07871201	Needle Guard (Front) Eccentric	頂針片(前)偏心輪	1
2		07870648	Screw (M5-0.8×5)	螺絲	2
3		07871203	Needle Guard (Front) Lever	頂針片(前)撥叉	1
4		07871204	Screw (M3-0.5×12)	螺絲	2
5		07871205	Needle Guard (Front) Holder	頂針片(前)固定座	1
6		07871206	Needle Guard (Front)	頂針片(前)	1
7		07871207	Collar C.Set	軸環組件	4
8		07871208	Needle Guard (Rear) Lever	頂針片(後)撥叉	1
9		07871209	Needle Guard (Rear) Holder	頂針片(後)固定座	1
10		07871210	Needle Guard (Rear)	頂針片(後)	1
11		07871211	Feed Dog Key	送料具鍵	2
12		07871212	Needle Guard (Rear) C.Set	頂針片(後)組	1
13		07871213	Differential Feed Rocker Lever	送料具差動搖臂	1
14		07870202	Screw (M4-0.7×10)	螺絲	2
15		07870256	Screw(M4-0.7×8)	螺絲	1
16		07870323	Washer	墊片	2
17		07871217	Differential Feed Adjusting Pin	送料具差動調整插銷	1
18		07871218	Differential Feed Bar Driving Connection	送料具差動軸驅動連桿	1
19		07871219	Feed Dog Bar C.Set	送料具固定座總成	1
20		07870650	Washer	墊片	2
21		07871221	Screw (M4-0.7×24)	螺絲	1
22		07871222	Sealing Plug(2.5×5)	止油塞	1
23		07871223	Driving Connection Bushing (Long)	驅動連桿襯套(長)	1
24		07871224	Main Feed Bar Driving Connection	主送料具軸驅動連桿	1
25		07871225	Screw (M3-0.5×8)	螺絲	2
27		07870724	Screw (M4-0.7×18)	螺絲	1
28		07871228	Main Feed Rocker Lever C.Set	主送料具搖臂組	1
29		07871229	Driving Connection Bushing (Short)	驅動連桿襯套(短)	1
30		07871230	Main Feed Rocker Lever	主送料具搖臂	1
31		07871231	Driving Connection Pin	驅動連桿插銷	1
32		07870229	Screw (M4-0.7×4)	螺絲	2
33		07871233	Differential Feed Bar	差動送料具固定座	1
34		07871234	Main Feed Bar	主送料具固定座	1
35		07871235	Feed Lift Block (Front)	送料具提升滑塊 (前)	1
36		07871236	Feed Lift Block (Rear)	送料具提升滑塊 (後)	1
37		07871237	Feed Bar Guide	送料具導桿	1
39	★	07871239	Main Feed Dog	主齒	1
40		07870125	Screw (M4-0.7×8)	螺絲	2

★ 請參照附件一、附件二【標準規格件】

12

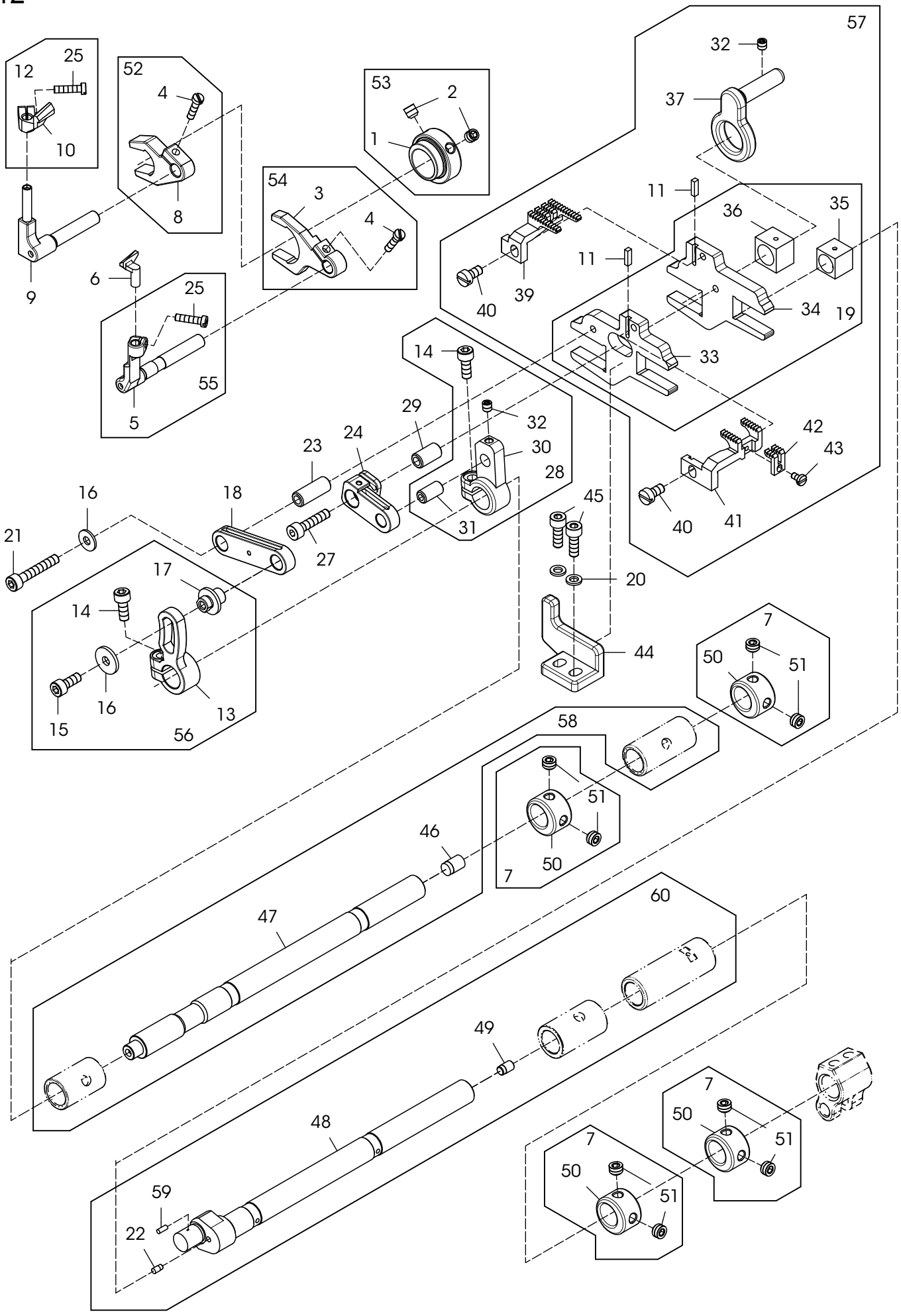

57
32
37
12
25
10
52
4
8
53
2
1
54
3
4
11
36
35
11
39
40
34
19
9
6
25
55
5
14
33
29
32
30
28
23
24
42
43
16
18
45
21
27
31
40
41
17
20
14
44
7
50
51
16
13
15
56
58
51
46
50
7
60
47
49
7
50
51
48
7
50
51
59
22

Ref. No.		Parts No.	Description	品 名	Amt. Req.
41	★	07871241	Differential Feed Dog	差動齒	1
42	★	07871242	Differential Feed Dog (Middle)	差動齒 (中間小齒)	1
43		07870221	Screw (M2.6-0.45×5)	螺絲	1
44		07871244	Feed Bar Guide	送料具導塊	1
45		07870623	Screw (M4-0.7×12)	螺絲	2
46		07871246	Seal Plug	封塞	1
47		07871247	Feed Rocker Shaft (Left)	送料具搖臂主軸	1
48		07871248	Feed Lift Shaft	送料具提升主軸	1
49		07871249	Seal Plug	封塞	1
50		07871250	Collar (11×18×11mm)	軸環	4
51		07870214	Screw (M6-1×4)	螺絲	8
52		07871252	Needle Guard (Rear) Lever C.Set	頂針片 (後) 撥叉組	1
53		07871253	Needle Guard (Front)	頂針片 (前) 偏心輪組	1
54		07871254	Needle Guard (Front) Lever C.Set	頂針片 (前) 撥叉組	1
55		07871255	Needle Guard (Front) Holder C.Set	頂針片 (前) 固定座組	1
56		07871256	Differential Feed Rocker C.Set	送料具差動搖臂組	1
57		07871257	Main Feed C.Set	主送料具組	1
58		07871258	Feed Rocker Shaft C.Set	送料具搖臂主軸組	1
59		07871259	Oil Wick	油蕊	1
60		07871260	Feed Lift Shaft C.Set	送料具提升主軸組	1

★ 請參照附件一、附件二【標準規格件】

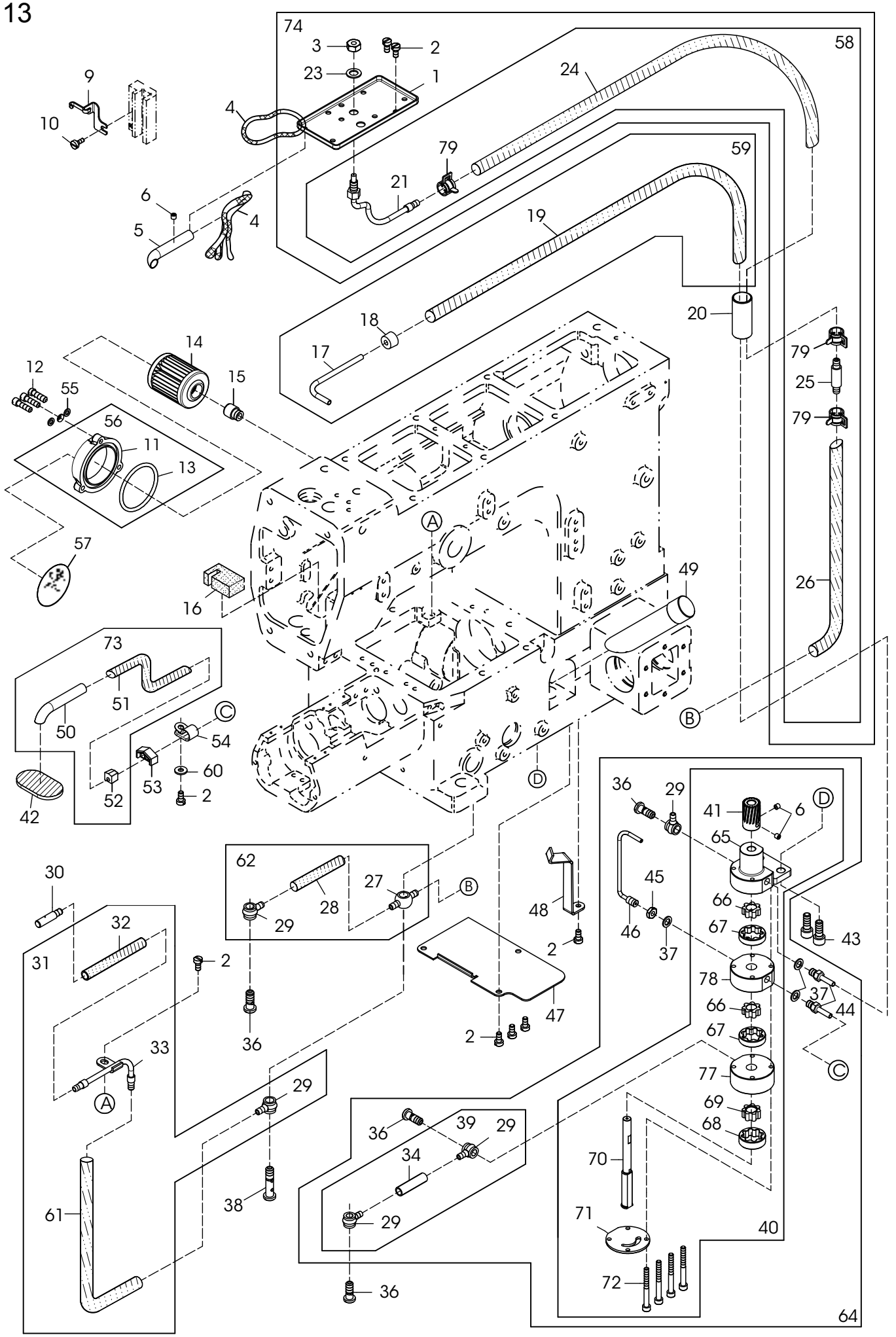
74
58
59
64
Ⓐ
Ⓑ
Ⓒ
Ⓓ

Ref. No.	Parts No.	Description	品 名	Amt. Req.
1	07871301	Oil Receiver	潤滑油接收盤	1
2	07870125	Screw (M4-0.7×8)	螺絲	8
3	07871303	Nut	螺帽	1
4	07871304	Oil Wick	油蕊	2
5	07871305	Needle Bar Connecting Rod Oil Pip	針棒連桿軸承給油管	1
6	07870229	Screw (M4-0.7×4)	螺絲	3
9	07871309	Oil Wick Holder	油蕊固定座	1
10	07870702	Screw (9/64-40×8)	螺絲	1
11	07871311	Oil Filter Cap	濾油器蓋	1
12	07871312	Screw (11/64-40×16)	螺絲	3
13	07871313	O-ring (P42)	O環	1
14	07871314	Oil Filter	濾油器	1
15	07871315	Oil Filter Connector (3/8-28×6)	濾油器連接管	1
16	07871316	Felt	吸油棉	1
17	07871317	Suction Pipe	迴油管	1
18	07871318	Suction Pipe Bushing	迴油管襯套	1
19	07871319	Oil Tube (3×5×440mm)	油管	1
20	07871320	Draining Pipe	油路套管	1
21	07871321	Oil Sight Top Nozzle	外視油量上噴嘴	1
23	07870547	Washer	墊片	1
24	07871324	Oil Tube (4×6×30mm)	油管 (4×6×30mm)	1
25	07871325	Non-Return Valve Unit	止回閥	1
26	07871326	Oil Tube (4×6×315mm)	油管 (4×6×315mm)	1
27	07871327	Oil Tube Joint, Two Way	油管接頭(雙向)	1
28	07871328	Oil Tube (4×6×35mm)	油管 (4×6×35mm)	1
29	07871329	Oil Tube Joint, One Way	油管接頭(單向)	5
30	07871330	Lower Shaft Oiling Outlet	筒臂轉軸部噴油頭	1
31	07871331	Oil Tube (Middle), Complete Set	油管(中段)總成	1
32	07871332	Oil Tube (4×6×50mm)	油管 (4×6×50mm)	1
33	07871333	Lower Shaft Oiling Shower	筒臂勾針軸部噴油孔	1
34	07871334	Oil Tube (4×6×30mm)	油管 (4×6×30mm)	1
36	07871336	Fitting Stud (Short)(1/4-40×16)	放油螺絲 (短)	4
37	07871337	Gasket	密合墊片	3
38	07871338	Fitting Stud (Long)(1/4-40×27)	放油螺絲 (長)	1
39	07871339	Oil Tube (Short), Complete Set	油管組(短)	1
40	07871340	Oil Pump, Complete Set	油泵組	1

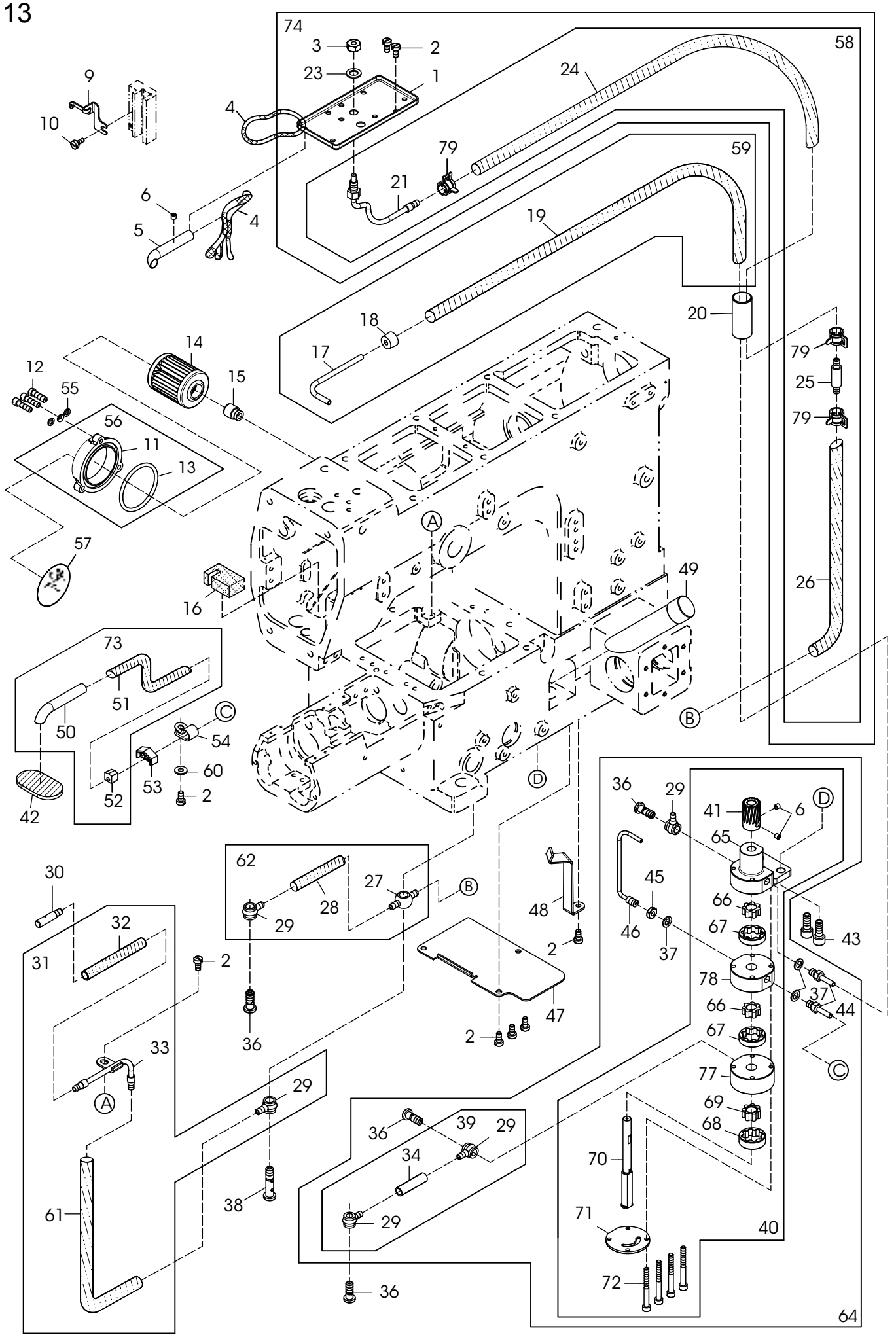
74
58
59
64
Ⓐ
Ⓑ
Ⓒ
Ⓓ

Ref. No.	Parts No.	Description	品 名	Amt. Req.
41	07871341	Oil Pump Driving Worm Gear	油泵驅動蝸齒組	1
42	07871342	Felt	吸油棉	1
43	07870915	Screw (M6-1×16)	螺絲	2
44	07871344	Suction Pipe	吸油管	2
45	07871345	Nut	螺帽	1
46	07871346	Oil Nozzle for Worm Gear	驅動蝸齒組噴油嘴	1
47	07871347	Dust Proof Plate	防塵蓋	1
48	07871348	Oil Tube Stay	油管固定架	1
49	07871349	Oil Sight Gauge	外視油量計	1
50	07871350	Suction Pipe	迴油管	1
51	07871351	Oil Tube	油管	1
52	07871352	Rubber Block	橡膠塊	1
53	07871353	Oil Screen	濾油網	1
54	07871354	Cable Clamp (UC-0.5)	配線固定紐	1
55	07870721	Washer	墊片	3
56	07871356	Oil Filter Cap C.Set	濾油器蓋組	1
57	07871357	Warning Sticker	貼紙	1
58	07871358	Oil Sight Top Nozzle C.Set	上噴油管組	1
59	07871359	Suction Pipe C.Set	迴油管組	1
60	07870323	Washer	墊片	1
61	07871361	Oil Tube	油管	1
62	07871362	Oil Tube Joint,Two Way C.Set	雙向油管接頭組	1
64	07871364	Oil Pump Frame C.Set	油泵本體組	1
65	07871365	Oil Pump Frame (Upper)	油泵本體 (上座)	1
66	07871366	Oil Pump Frame Pinion	油泵本體內轉子	2
67	07871367	Oil Pump Frame Pinion	油泵本體內轉子	2
68	07871368	Oil Pump Frame Pinion	油泵本體內轉子	1
69	07871369	Oil Pump Frame Pinion	油泵本體內轉子	1
70	07871370	Oil Pump Shaft	油泵主軸	1
71	07871371	Lower Cover	下座蓋	1
72	07871372	Screw (M4-0.7×39.8)	螺絲	4
73	07871373	Oil Tube C.Set	油管組件	1
74	07871374	Oil Receiver C.Set	潤滑油接收盤組	1
77	07871377	Oil Pump Frame (Lower)	油泵本體 (下座)	1
78	07871378	Oil Pump Frame (Middle)	油亨本體 (中座)	1
79	07871379	Tube Clamp	管束	3

1

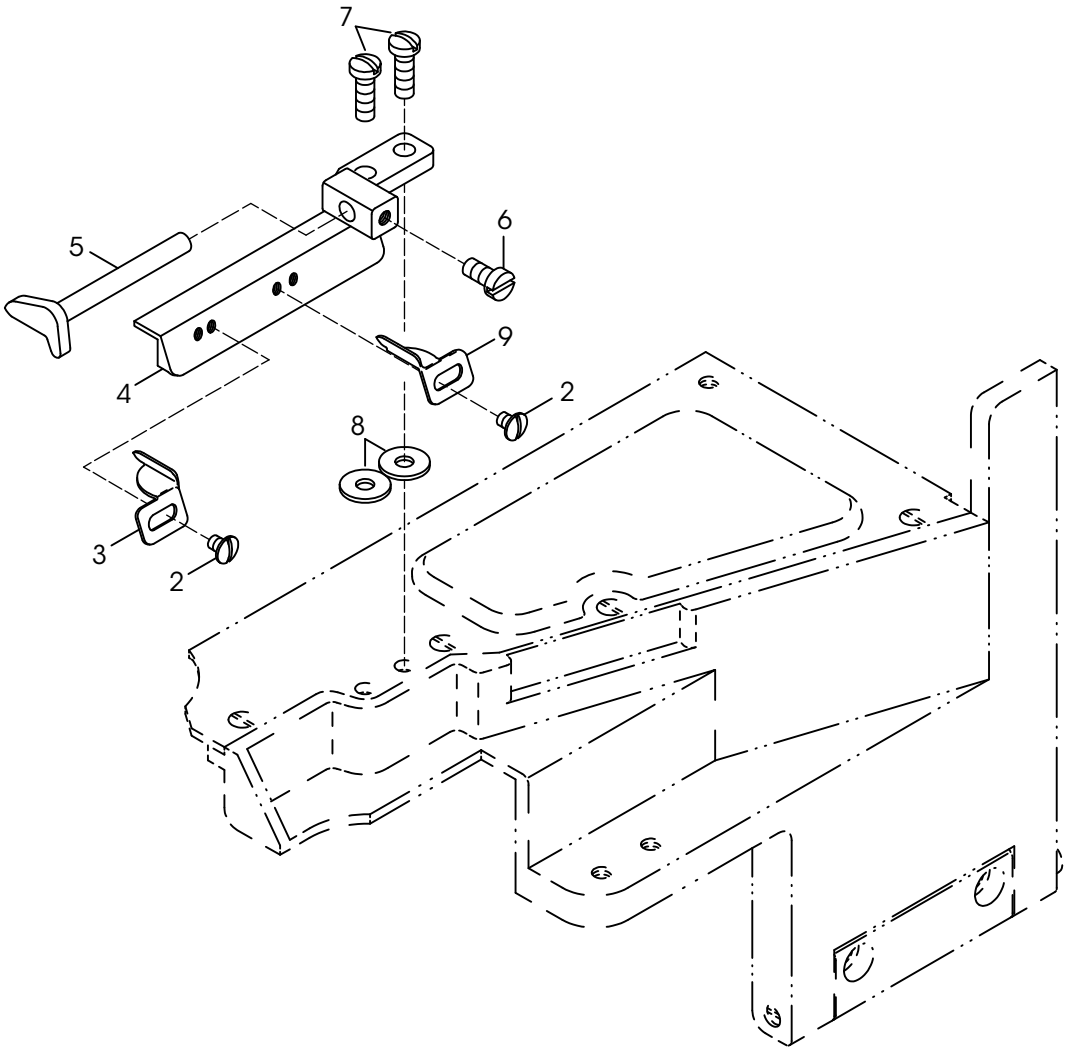

10（車立骨用，須另外訂購）

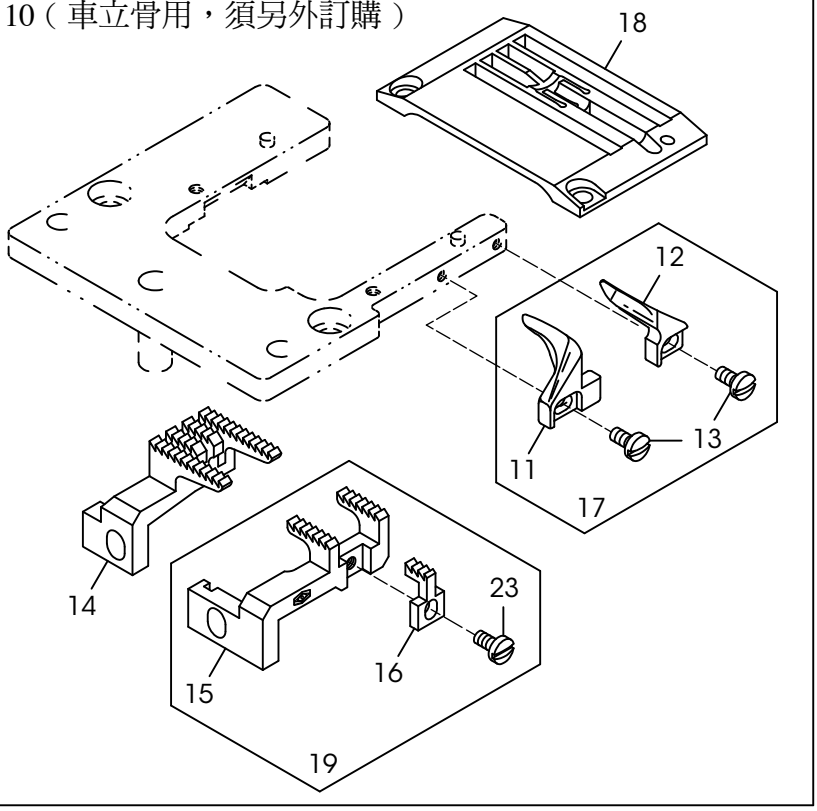

20

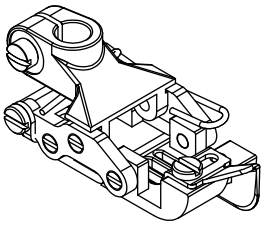

21

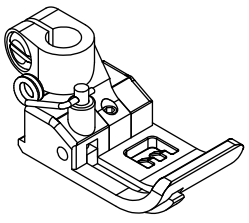

22

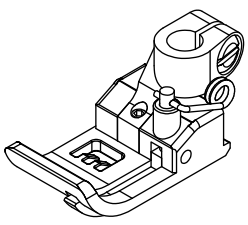

Ref. No.	Parts No.	Description	品 名	Amt. Req.
1	07871401	Bottom Hemming Folder	折下擺組	1
2	07871402	Screw (1/8-44×4)	螺絲	2
3	07871403	Fabric Edge Guide (Left)	左擋邊	1
4	07871404	Folder Stand	折下擺座	1
5	07871405	Fabric Edge Guide (Right)	右擋邊	1
6	07870125	Screw (M4-0.7×8)	螺絲	1
7	07870102	Screw (M4-0.7×12)	螺絲	2
8	07870323	Washer	墊片	2
9	07871409	Fabric Edge Guide (Right & Small)	小右擋邊	1
10	07871410	Gauge Set For Covering Seam	立骨布導器配件組	1
11	07871411	Fabric Guide (Left)	立骨布導器 (左)	1
12	07871412	Fabric Guide (Right)	立骨布導器 (右)	1
13	07870221	Screw (M2.6-0.45×5)	螺絲	2
14	07871239	Main Feed Dog	主齒	1
15	07871241	Differential Feed Dog	差動齒	1
16	07871416	Differential Feed Dog (Middle)	小齒	1
17	07871417	Frabic Guide C.Set	立骨布導器組	1
18	★	Needle Plate For Covering Seam	立骨用針鈑	1
19	07871419	Differential Feed Dog C.Set	差動齒組	1
20	07871420	Presser Foot	戰車押腳	1
21	07871421	Presser Foot (Left)	左擋邊押腳	1
22	07871422	Presser Foot (Ringt)	右擋邊押腳	1
23	07870221	Screw (M2.6-0.45×5)	螺絲	1

★ 請參照附件一、附件二【標準規格件】

15

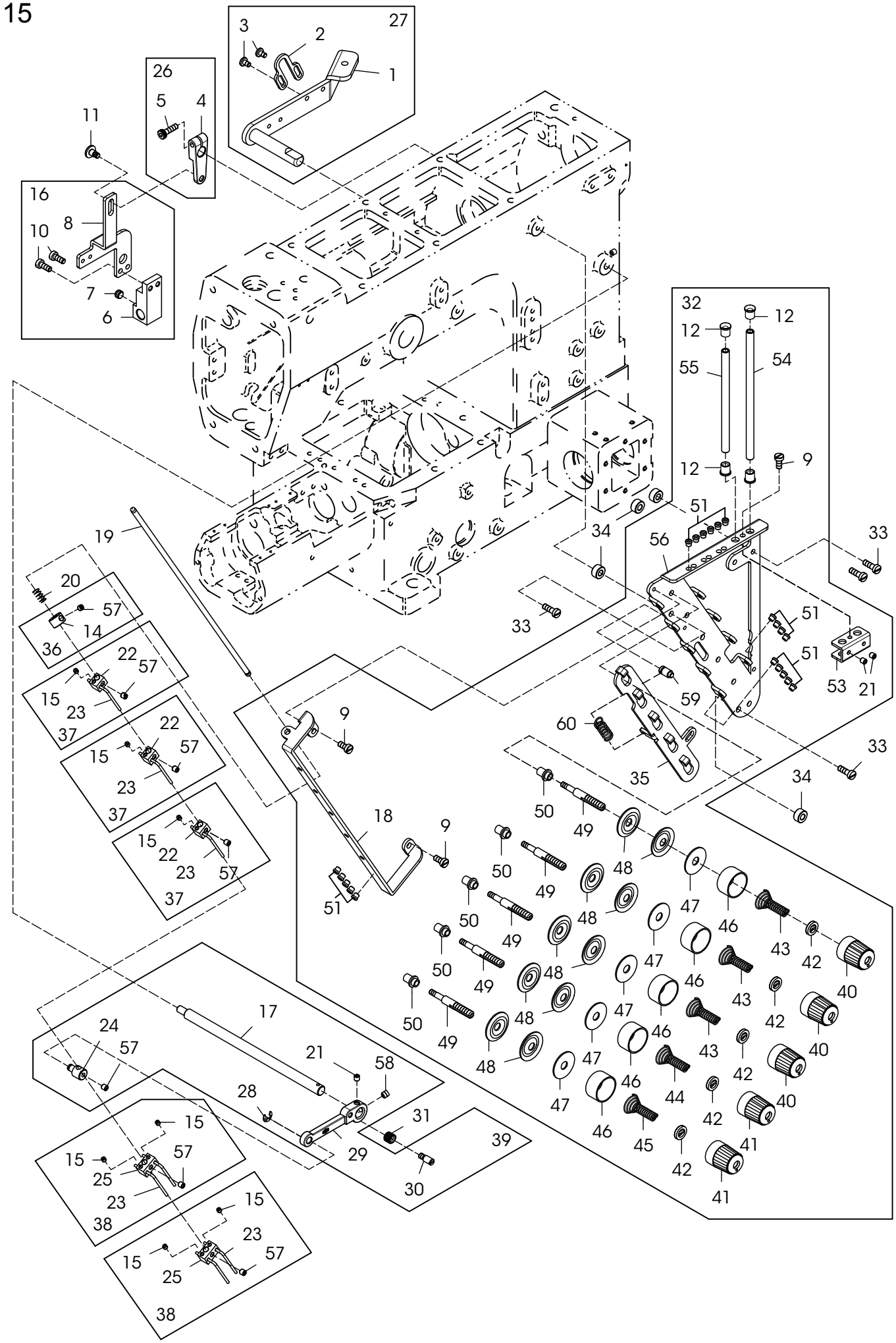
1
2
3
4
5
6
7
8
9
10
11
12
14
15
16
17
18
19
20
21
22
23
24
25
26
27
28
29
30
31
32
33
34
35
36
37
38
39
40
41
42
43
44
45
46
47
48
49
50
51
53
54
55
56
57
58
59
60

Ref. No.	Parts No.	Description	品　　名	Amt. Req.
1	07871501	Lifter Lever	壓腳拉桿	1
2	07871502	Lifter Lever Stop	拉桿止架	1
3	07870845	Screw (9/64-40×6)	螺絲	2
4	07871504	Tension Release Lever	張力釋放槓桿	1
5	07870622	Screw (M4-0.7×14)	螺絲	1
6	07871506	Tension Release Block	張力釋放滑塊	1
7	07870214	Screw (M6-1×4)	螺絲	1
8	07871508	Tension Release Connecting Plate	張力釋放連接壓板	1
9	07870125	Screw (M4-0.7×8)	螺絲	3
10	07870706	Screw (M4-0.7×10)	螺絲	2
11	07871511	Screw(M4-0.7×4.5)	螺絲	1
12	07400383	Thread Eyelet	過線陶瓷(深灰)	4
14	07871514	Collar	軸環	1
15	07870319	Screw (1/8-44×3)	螺絲	7
16	07871516	Tension Plate C.Set	張力壓板組	1
17	07871517	Tension Release Shaft	張力釋放轉軸	1
18	07871518	Thread Pull-off Eyelet	過線鬆線架	1
19	07871519	Thread Pull-off Bar	過線鬆線桿	1
20	07871520	Swing-Proof Spring	防震彈簧	1
21	07870229	Screw (M4-0.7×4)	螺絲	3
22	07871522	Thread Pull-off Hook Unit (One Hook)	鬆線鉤組(單腳)	3
23	07871523	Hook	鬆線鉤	7
24	07871524	Thread Pull-off Bar Holder	過線鬆線桿固定座	1
25	07871525	Thread Pull-off Hook Unit (Double Hook)	鬆線鉤組(雙腳)	2
26	07871526	Lever Fixed	槓桿固定組	1
27	07871527	Lifter Lever C.Set	壓腳拉桿組	1
28	07871528	Retaining Ring	扣環	1
29	07871529	Thread Pull-off Lever	過線鬆線拉柄	1
30	07871530	Tension Release Adjusting Eccentric	張力釋放調整偏心輪	1
31	07871531	Spring	彈簧	1
32	07871532	Thread Eyelet Tension C.Set	過線張力組	1
33	07870102	Screw (M4-0.7×12)	螺絲	4
34	07871534	Spacer	隔片	4
35	07871535	Tension Disc Separator	過線張力盤分離架	1
36	07871536	Collor C.Set	軸環組	1
37	07871537	Hook C.Set	鬆線鉤組	3
38	07871538	Hook C.Set	鬆線鉤組	2
39	07871539	Pull-Off Handle C.Set	鬆線拉柄組	1
40	07870301	Thread Tension Spring Cap (Blue)	上線張力彈簧調整鈕(藍)	3

15

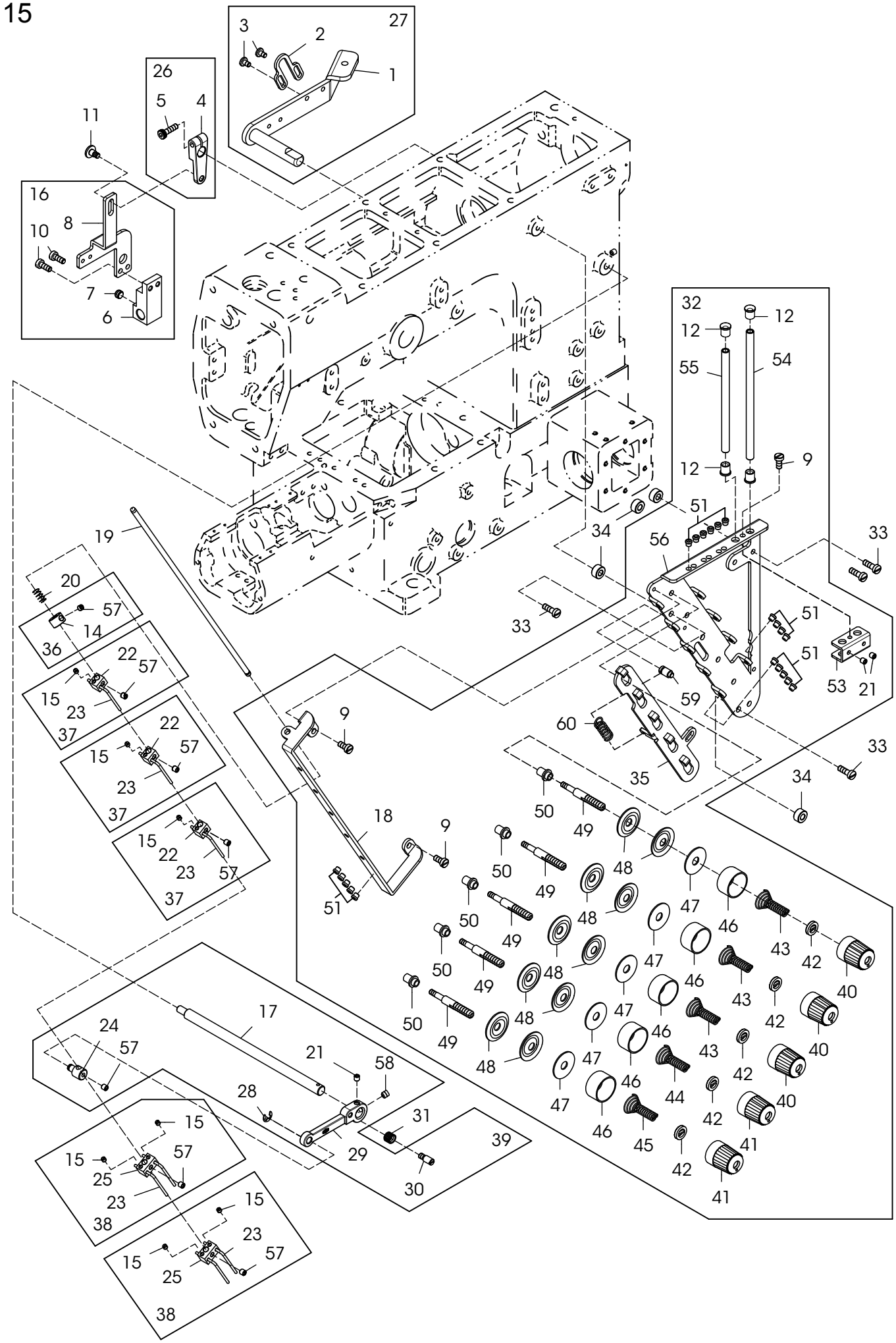
1
2
3
4
5
6
7
8
9
10
11
12
14
15
16
17
18
19
20
21
22
23
24
25
26
27
28
29
30
31
32
33
34
35
36
37
38
39
40
41
42
43
44
45
46
47
48
49
50
51
53
54
55
56
57
58
59
60

Ref. No.	Parts No.	Description	品　　名	Amt. Req.
41	07870343	Thread Tension Spring Cap (Red).....	上線張力彈簧調整鈕(紅)....	2
42	07870302	Thnsion Spring Dise Support.....	張力彈簧調整圓盤.....	5
43	07870303	Needle Thread Tension Spring.....	針線張力彈簧.....	3
44	07870304	Top Cover Thread Tension Spring.....	上飾線張力彈簧.....	1
45	07870305	Looper Thread Tension Spring.....	下勾針張力彈簧.....	1
46	07870306	Thread Thnsion Spring Retainer.....	上線張力彈簧固定座.....	5
47	07870307	Felt.....	氈墊.....	5
48	07870308	Thnsion Disc.....	張力調整盤.....	10
49	07870309	Thnsion Post.....	上線張力彈簧支柱.....	5
50	07870310	Thnsion Post Ferrule.....	上線張力彈簧支柱套圈.....	5
51	07870317	Thread Eyelet.....	陶瓷過線孔.....	20
53	07870313	Thread Eyelet Pipe Stay.....	過線導管固定座.....	1
54	07870320	Thread Eyelet Pipe (Long).....	過線導管(長).....	1
55	07870321	Thread Eyelet Pipe (Short).....	過線導管(短).....	1
56	07870312	Thnsion Post Support.....	上線張力組支柱座.....	1
57	07871557	Screw (M4-0.7×3).....	螺絲.....	7
58	07871558	Screw (M4-0.7×4.5).....	螺絲.....	1
59	07871559	Screw (M4-0.7×2.5).....	螺絲.....	1
60	07871560	Spring.....	彈簧.....	1

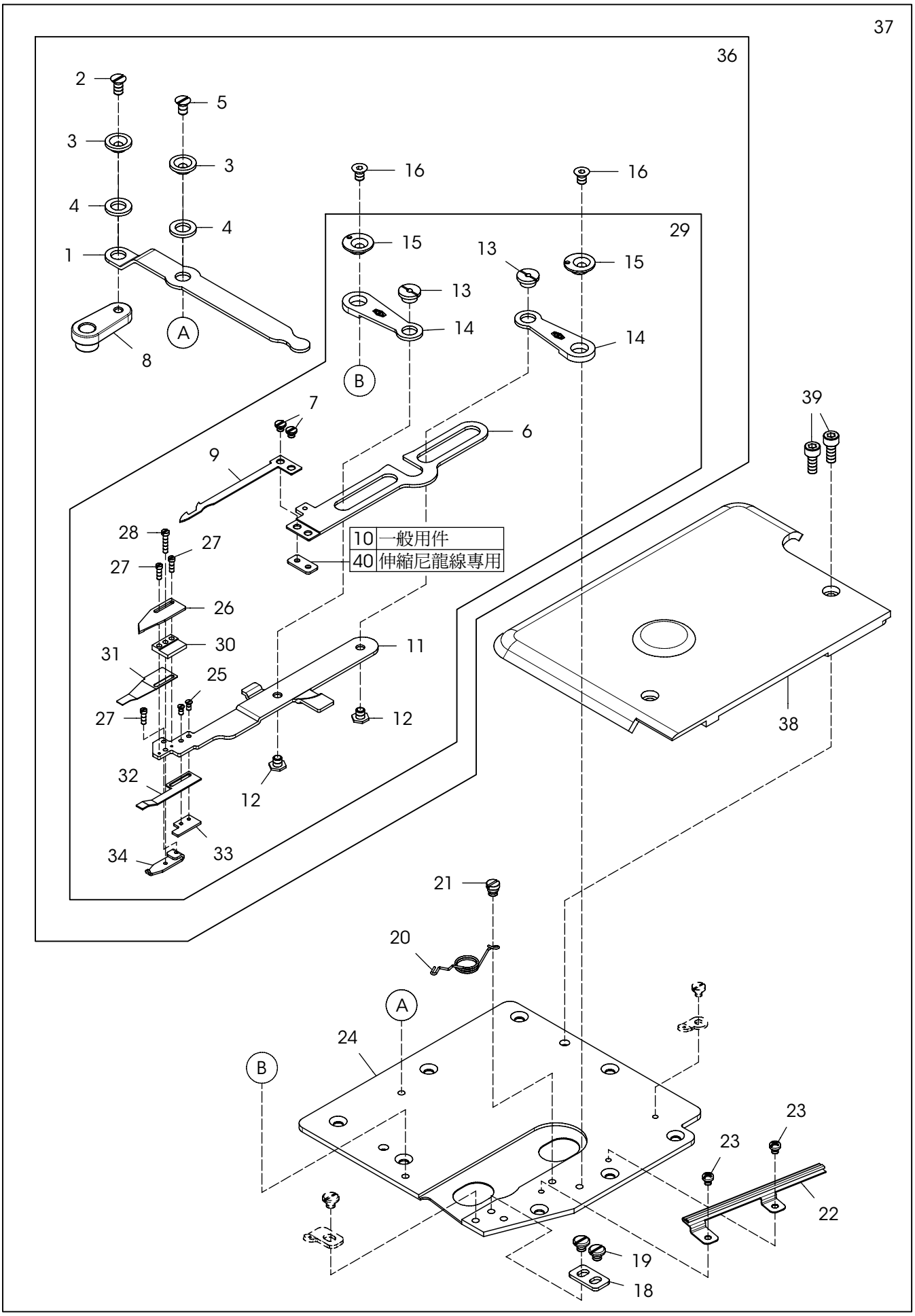
37
36
29
2
5
3
3
4
4
1
8
A
16
16
15
15
13
13
14
14
B
7
6
9
39
28
27
27
10 一般用件
40 伸縮尼龍線專用
26
30
31
11
25
27
12
12
38
32
33
34
21
20
A
24
B
23
23
22
19
18

BOTTOM TRIMMER MECHANISM 底線切線刀機構 **16**

Ref. No.	Parts No.	Description	品 名	Amt. Req.
1	07871601	Lower Knife Driving Lever	下切刀驅動連桿	1
2	07871602	Screw (M4-0.7×8.5)	螺絲	1
3	07871603	Lower Knife Driving Lever Ring	驅動連桿護環	2
4	07871604	Washer	墊片	2
5	07870203	Screw (M4-0.7×7)	螺絲	1
6	07871606	Lower Knife Carrier	下切刀托架	1
7	07871607	Screw (M3-0.5×2.5)	螺絲	2
8	07871608	Connecting Plug	下切刀插接頭	1
9	07871609	Lower Moving Knife	下活動刀	1
10	07871610	Lower Knife Holder	下切刀固定座	1
11	07871611	Upper Fixing Knife Carrier	上固定刀托架	1
12	07871612	Screw (M4-0.7×4)	螺絲	2
13	07871613	Nut	螺帽	2
14	07871614	Knife Guide Lever	切刀導引搖臂	2
15	07871615	Knife Guide Lever Eccentric Ring	切刀導引搖臂偏心輪	2
16	07871616	Screw (M4-0.7×7)	螺絲	2
18	07871618	Upper Knife Carrier Stop	上固定刀托架止板	1
19	07871619	Screw (M4-0.7×4)	螺絲	2
20	07871620	Upper Knife Carrier Spring	上固定刀托架復進簧	1
21	07871621	Screw (M4-0.7×4)	螺絲	1
22	07871622	Looper Thread Guide	底線過線護槽	1
23	07871009	Screw (M3-0.5×3)	螺絲	2
24	07871624	Crank Chamber Cover	曲柄軸室蓋	1
25	07871625	Screw (M2-0.4×4)	螺絲	2
26	07871626	Upper Fixing Knife	上固定刀	1
27	07871627	Screw (M2-0.4×6)	螺絲	3
28	07871628	Screw (M2-0.4×10)	螺絲	1
29	07871629	Lower Knife Frame C.Set	下切刀本體組	1
30	07871630	Upper Fixing Guide	上固定刀導引架	1
31	07871631	Clamp Spring	夾緊彈簧片	1
32	07871632	Clamp Spring Pressure	夾緊壓力彈簧刀片	1
33	07871633	Clamp Spring Pressure Holder	夾緊壓力彈簧固定座	1
34	07871634	Clamp Spring Pressure Adjusting Piece	壓力彈簧調整片	1
36	07871636	Lower Knife C.Set	下切刀組	1
37	07871637	Lower Knife Assembly	下切刀總成	1
38	07871638	Cloth Plate (Electrlcal Type)	縫製平台(電切)	1
39	07870202	Screw (M4-0.7×10)	螺絲	2
40	07871640	Lower Knife Holder (For Elastic Nylon Line)	下切刀固定座(伸縮尼龍線專用)	1

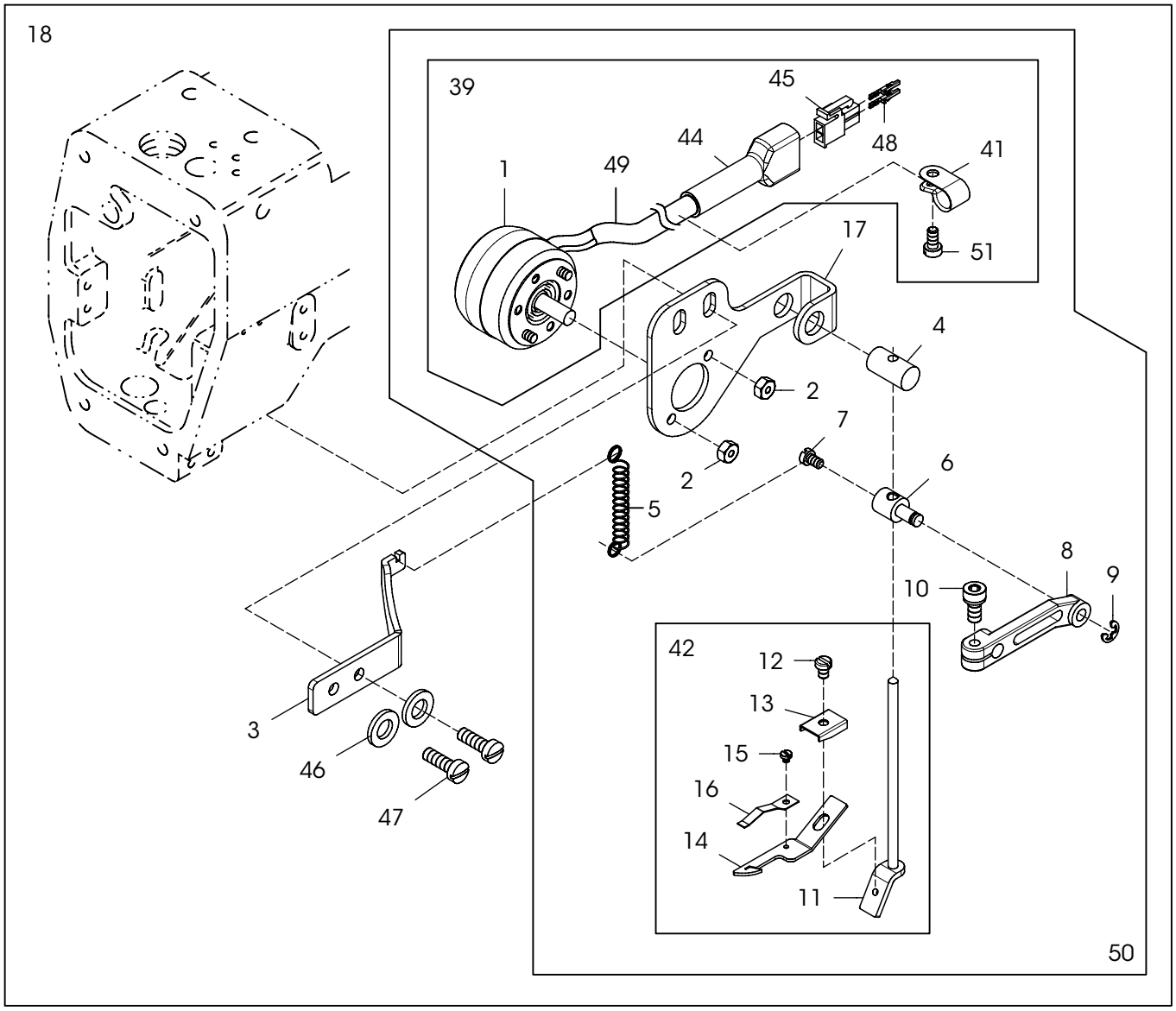
18
39
45
48
44
49
1
41
51
17
4
2
2
7
6
5
8
9
10
42
12
13
15
16
14
11
3
46
47
50

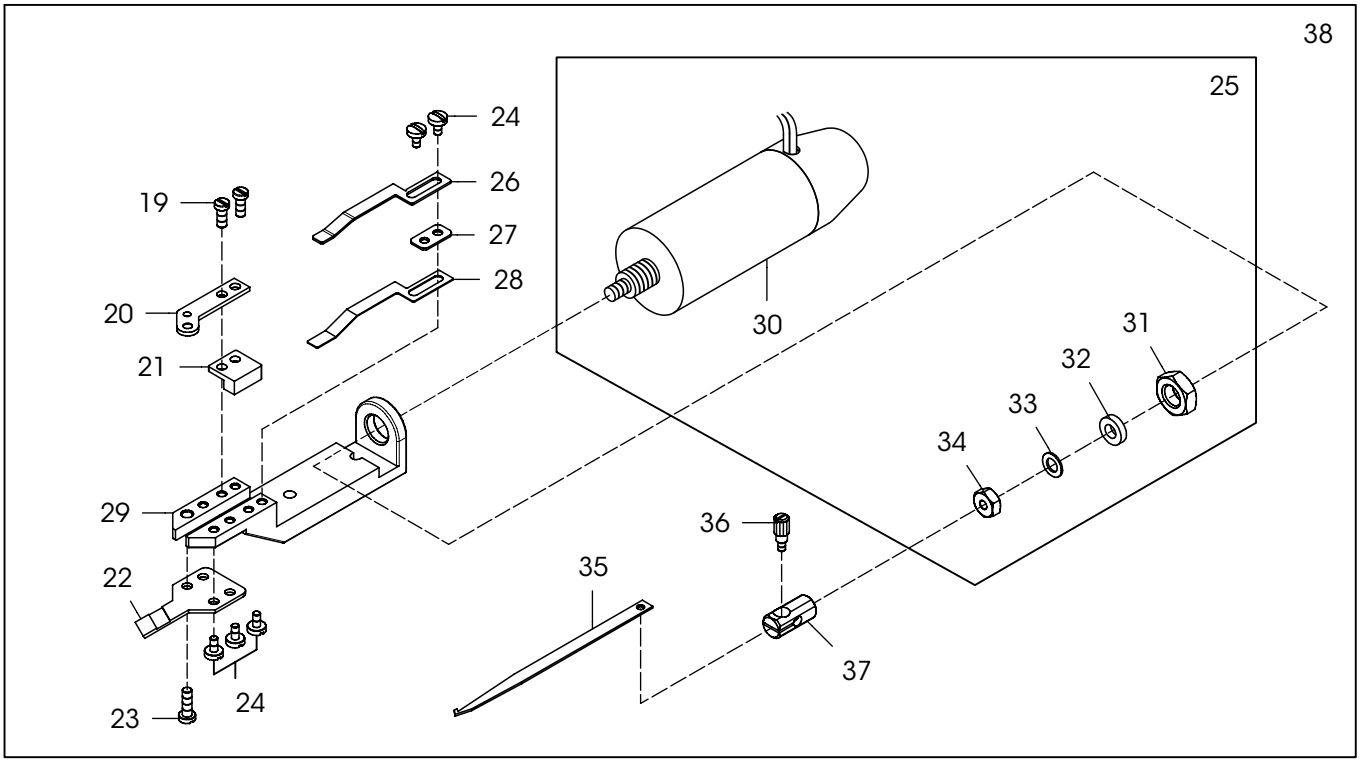
38
25
24
26
19
27
28
20
21
30
31
32
33
34
29
36
35
22
37
24
23

Ref. No.	Parts No.	Description	品　　名	Amt. Req.
1	07871701	Wiper Solenoid	撥線電磁閥	1
2	07871702	Nut	螺帽	2
3	07871703	Buffer Spring Bracket	緩衝彈簧吊架	1
4	07871704	Wiper Bar Guide	撥線搖臂導塊	1
5	07871705	Buffer Spring	緩衝彈簧	1
6	07871706	Solenoid Lever Pin	電磁閥搖臂插銷	1
7	07870712	Screw (M3-0.5×5)	螺絲	1
8	07871708	Solenoid Lever	電磁閥搖臂	1
9	07871709	Retaining Ring	扣環	1
10	07871710	Screw (M4-0.7×8)	螺絲(內六角)	1
11	07871711	Wiper Bar	撥線搖臂	1
12	07871712	Screw (M3-0.5×4)	螺絲	1
13	07871713	Wiper Holder	撥線鉤固定座	1
14	07871714	Wiper	撥線鉤	1
15	07871715	Screw (M2-0.4×2)	螺絲	1
16	07871716	Clamp Spring	夾線彈簧片	1
17	07871717	Solenoid Bracket	撥線電磁閥托架	1
18	07871718	Electrical Type Thread Wiper C.Set	電磁式撥線組	1
19	07871719	Screw (3/32-56×6)	螺絲	2
20	07871720	Clamp Spring Pressure Adjusting Piece	上切刀壓力調整片	1
21	07871721	Pressure Adjusting Piece Spacer	壓力調整隔片	1
22	07871722	Fixed Trimming Knife	上切刀固定刀	1
23	07871723	Screw (3/32-56×8)	螺絲	1
24	07870426	Screw (3/32-56×4)	螺絲	5
25	07871725	Knife Guide Solenoid C.Set	上切刀電磁閥組	1
26	07871726	Clamp Spring Pressure	夾線壓力片	1
27	07871727	Clamp Spring Pressure Spacer	夾線壓力隔片	1
28	07871728	Thread Clamp	夾線片	1
29	07871729	Knife Guide Bracket	上切刀導槽托架	1
30	07871730	Solenoid	電磁鐵	1
31	07871731	Nut	螺帽	1
32	07871732	Washer	墊片	1
33	07871733	Spring Washer	彈簧墊片	1
34	07871734	Nut	螺帽	1
35	07871735	Movable Trimming Knife	上活動刀片	1
36	07871736	Screw (M2-0.4×4.5)	螺絲	1
37	07871737	Movable Knife Holder	上切刀台	1
38	07871738	ElectricalTypeTopTrimmerC.Set	電磁式上切線組	1
39	07871739	Wiper Solenoil Terminal	撥線電磁閥端子	1

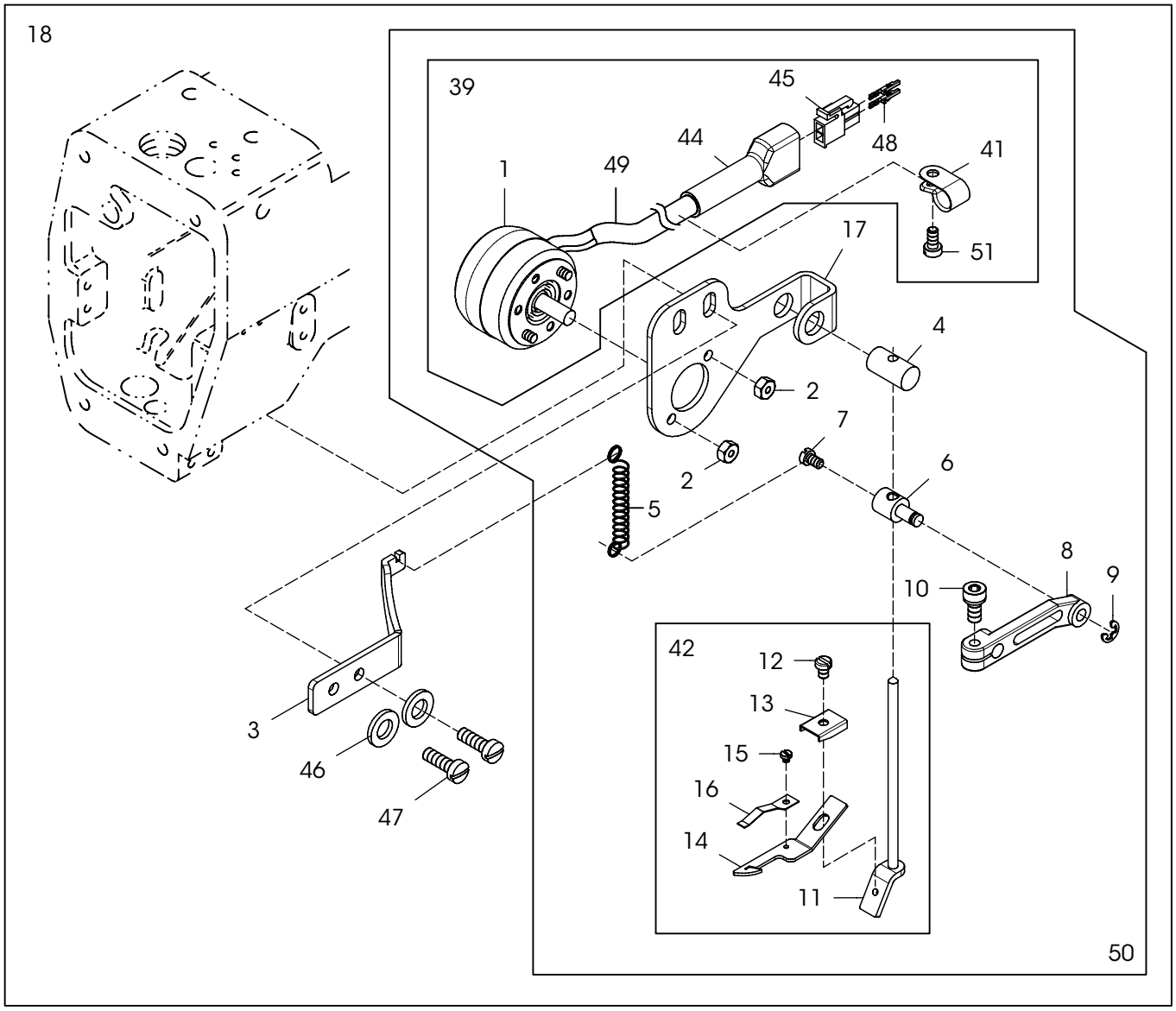
18
39
45
48
44
49
1
41
51
17
4
2
2
7
6
5
8
9
10
42
12
13
15
16
14
11
3
46
47
50

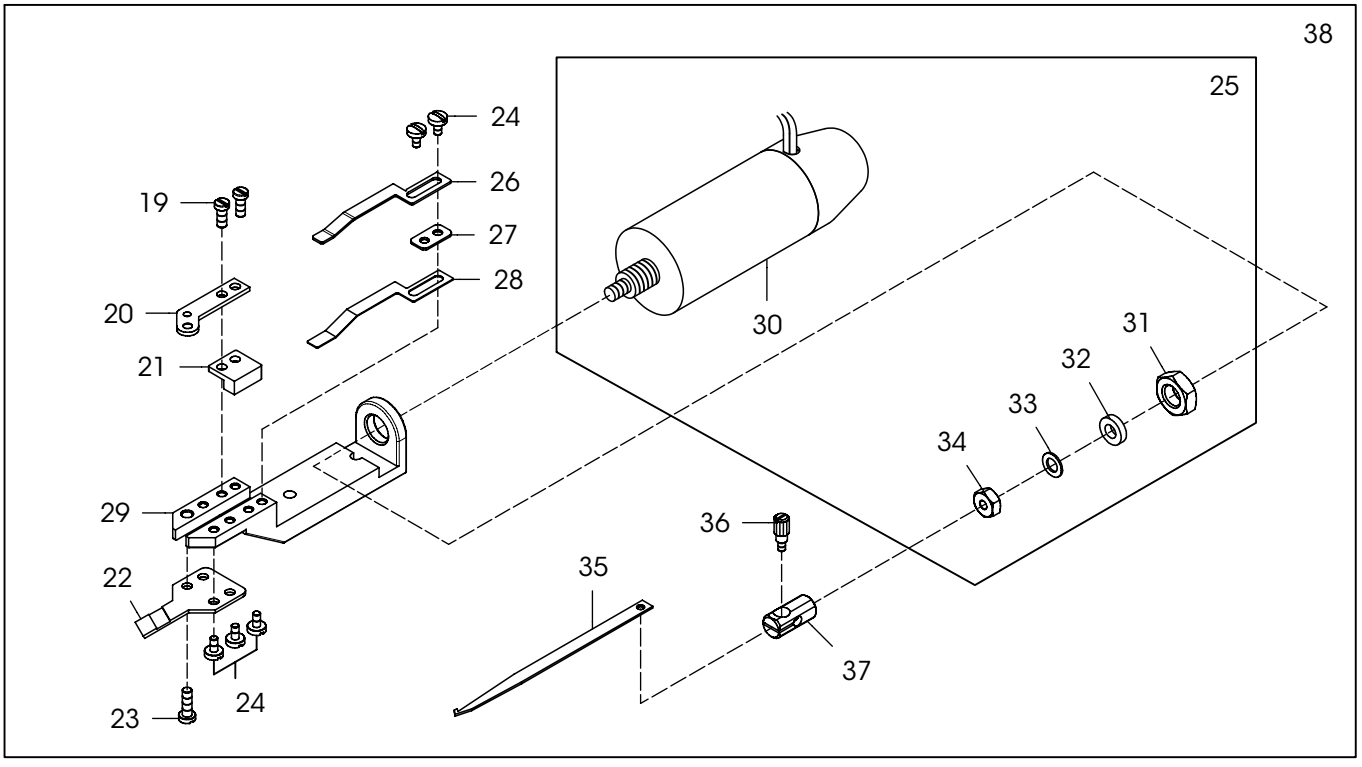
38
25
24
26
19
27
28
20
21
30
31
32
33
34
29
36
35
22
37
24
23

Ref. No.	Parts No.	Description	品　　名	Amt. Req.
41	07871741	Cable Clamp (UC-0.5).....	配線固定鈕.....	1
42	07871742	Wiper Bar C.Set.....	撥線搖臂組.....	1
44	07871744	Wiper Terminal Rubber Cover.....	撥線端子護套.....	1
45	07871745	Joint.....	端子座.....	1
46	07870323	Washer.....	墊片.....	2
47	07870102	Screw (M4-0.7×12)	螺絲.....	2
48	07871748	Pin.....	端子.....	2
49	07871749	Tube (Black).....	塑膠管 (黑).....	1
50	07871750	Electrical Type Thread Wiper.....	電磁式上撥線.....	1
51	07870125	Screw (M4-0.7×8).....	螺絲(一字頭).....	1

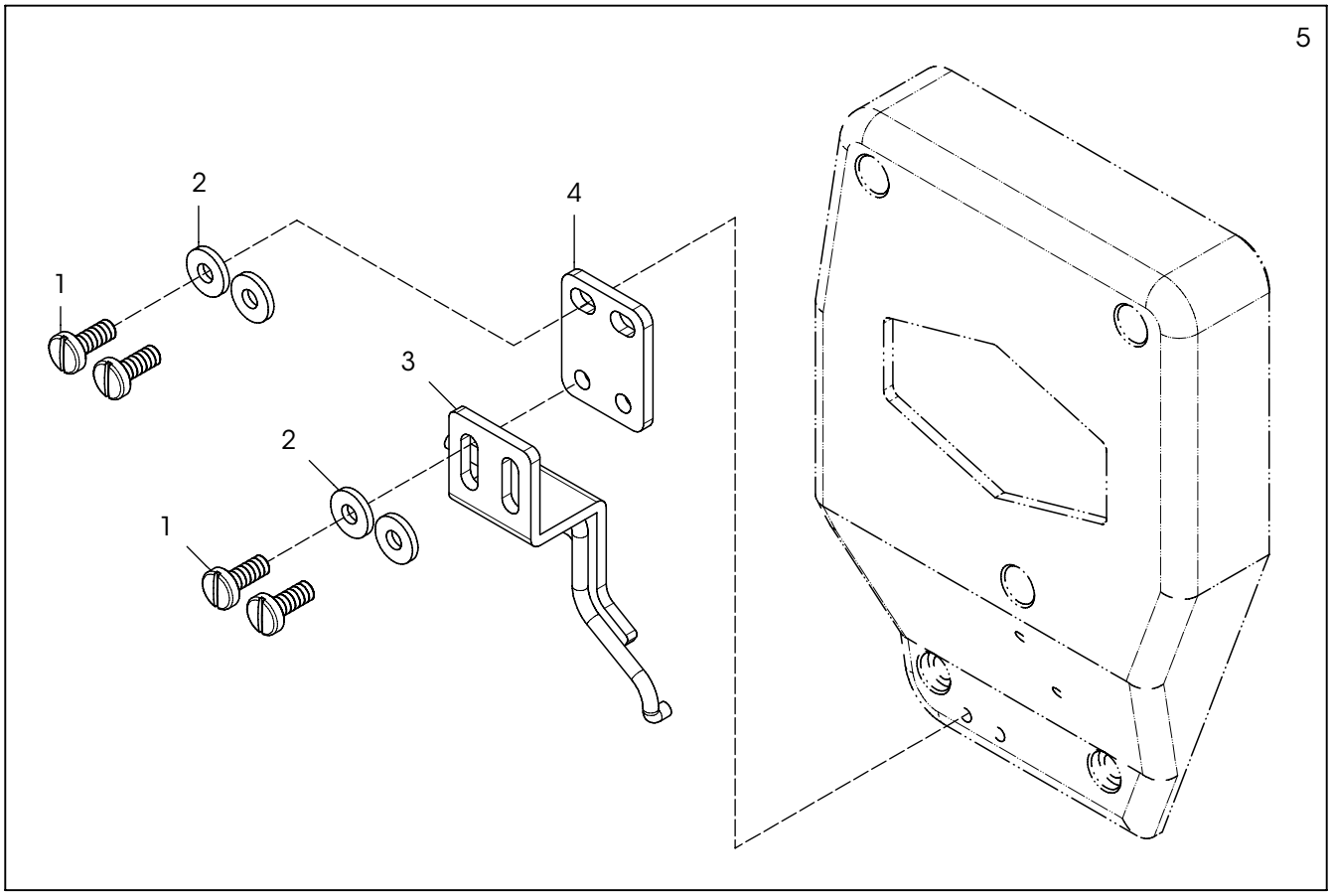
5
1
2
2
1
3
4

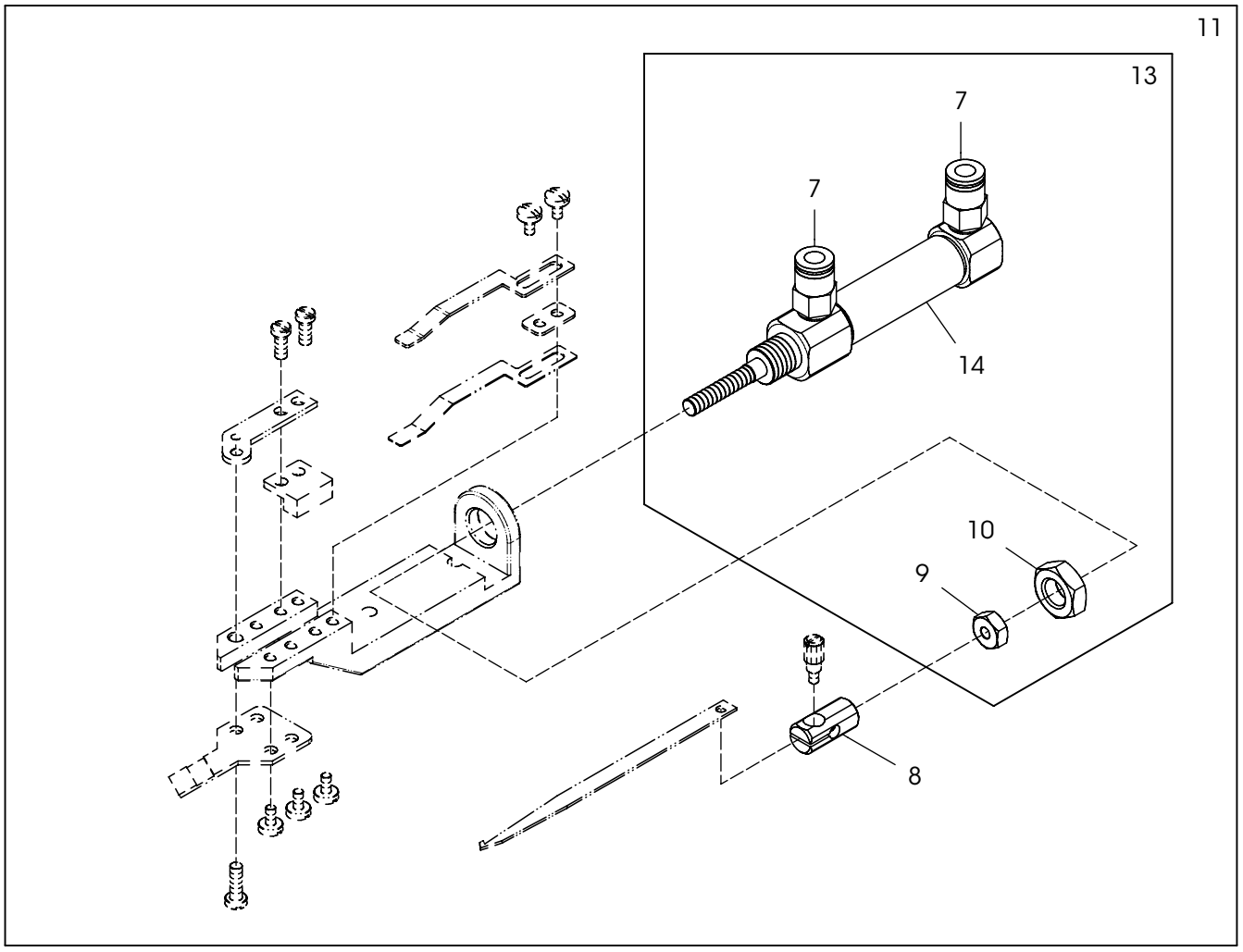
11
13
7
7
14
10
9
8

PNEUMATIC TYPE TOP AIR WIPER & TRIMMER MECHANIS 氣壓式上吹風撥線及切線機 18

Ref. No.	Parts No.	Description	品 名	Amt. Req.
1	07870102	Screw (M4-0.7×12)……	螺絲……	4
2	07870323	Washer……	墊片……	4
3	07871803	Air Wiper……	吹風撥線管……	1
4	07871804	Air Wiper Holder……	撥線管固定座……	1
5	07871805	Pneumatic Type Air Wiper C.Set……	氣壓式吹風撥線組……	1
7	07871807	Elbow Connector……	肘形接頭……	2
8	07871808	Pneumatic Type Movable Knife Holder……	氣壓式上切刀台……	1
9	07871809	Nut……	螺帽……	1
10	07871810	Nut……	螺帽……	1
11	07871811	Pneumatic Type Top Trimmer C.Set……	氣壓式上切刀組……	1
13	07871813	Air Cylinder C.Set……	氣缸組件……	1
14	07871814	Air Cylinder……	氣壓管……	1

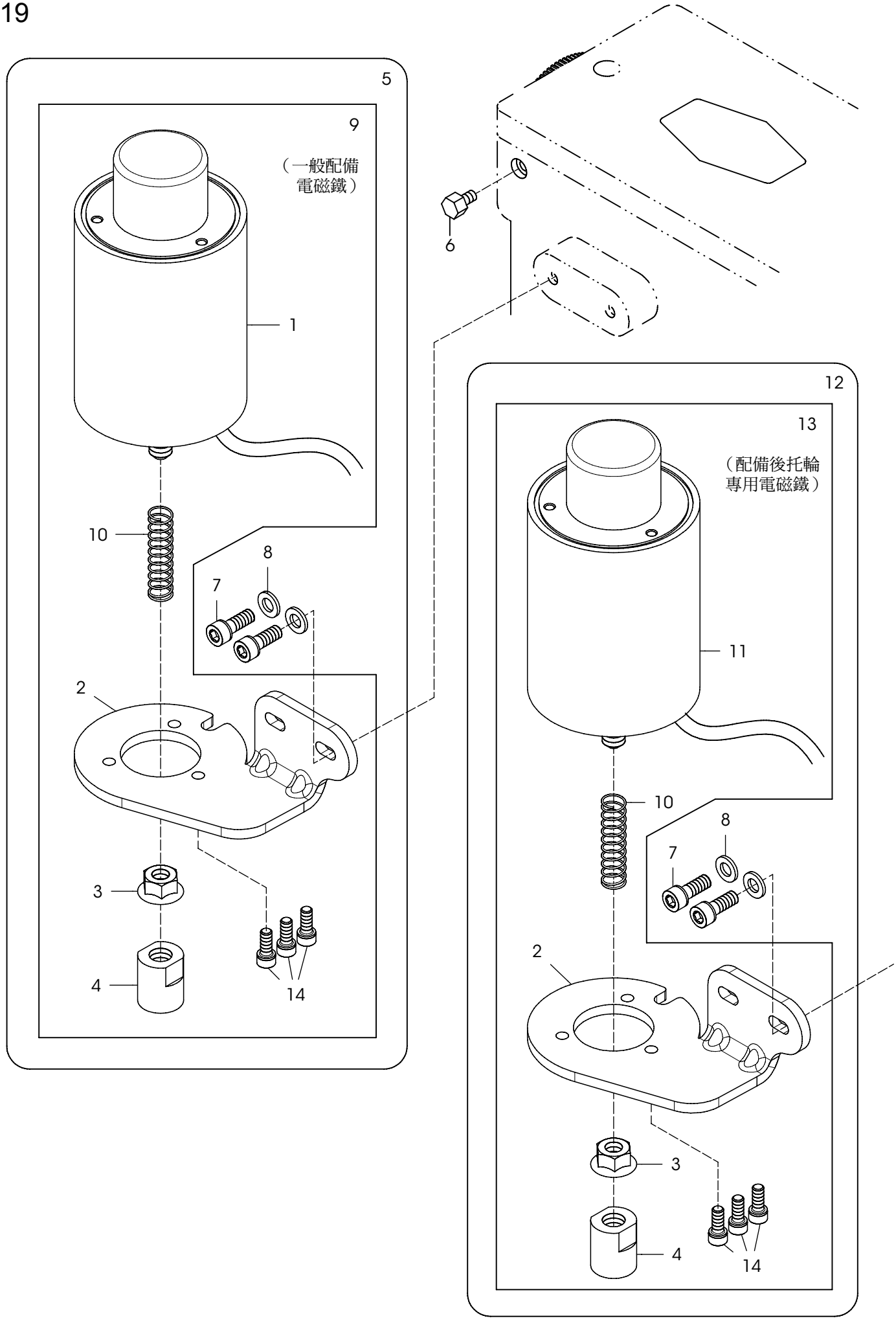
5
9
（一般配備
電磁鐵）
1
10
8
7
2
3
4
14
6
12
13
（配備後托輪
專用電磁鐵）
11
10
8
7
2
3
4
14

Ref. No.	Parts No.	Description	品　　名	Amt. Req.
1	07871901	Presser Foot Lefter Solenoid……	抬壓腳電磁鐵(強力型)……	1
2	07871902	Solenoid Bracket……	電磁鐵吊架……	1
3	07871903	Nut……	螺帽……	1
4	07871904	Plastic Pushing Block……	塑膠推塊……	1
5	07871905	Presser Foot Lefter C. Set……	電磁直接式抬壓腳組(強力型)	1
6	07870245	Screw (M4-0.7×8)……	螺絲……	1
7	07871907	Screw (M6-1.0×16)……	螺絲……	2
8	07870547	Washer……	墊片……	2
9	07871909	Presser Foot Lefter Solenoid C.Set……	抬壓腳電磁鐵組(一般配備).	1
10	07871910	Spring……	定位緩衝壓簧……	1
11	07871911	Presser Foot Lefter Solenoid……	抬壓腳電磁鐵(普通形)……	1
12	07871912	Presser Foot Lefter C. Set……	電磁直接式抬壓腳組(普通型)	1
13	07871913	Presser Foot Lefter Solenoid C.Set……	抬壓腳電磁鐵組(後托輪專用)..	1
14	07871914	Screw (M5-0.8×12)……	螺絲……	3

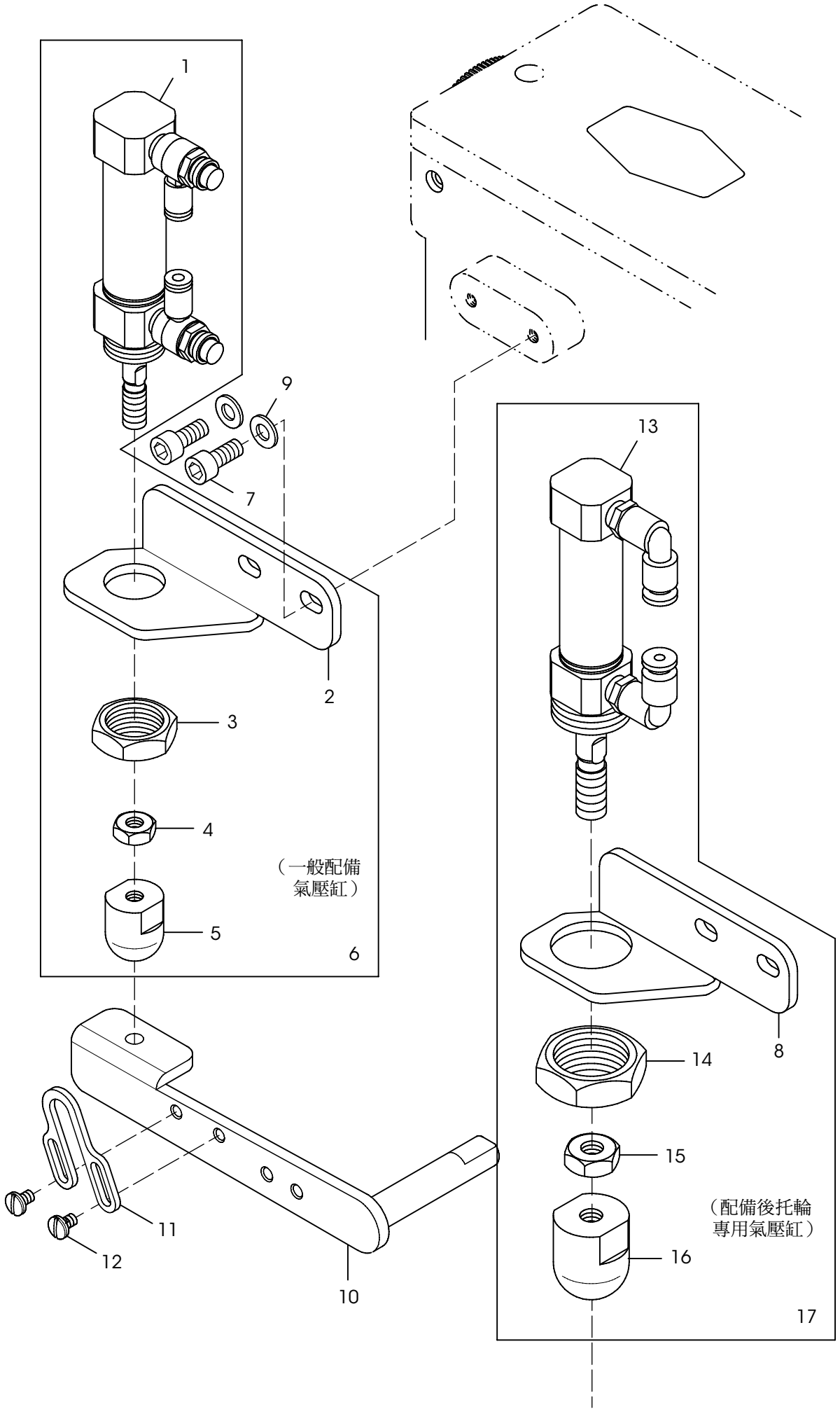
1
9
7
2
3
4
5
6
（一般配備
氣壓缸）
13
14
8
15
16
17
（配備後托輪
專用氣壓缸）
10
11
12

PNEUMATIC TYPE PRESSER FOOT LEFTER 氣壓式抬押腳組 **20**

Ref. No.	Parts No.	Description	品 名	Amt. Req.
1	07872001	Air Cylinder……	空壓管(普通型)……	1
2	07872002	Air Cylinder Bracket……	空壓管托架(小、風切)……	1
3	07872003	Nut……	螺帽……	1
4	07872004	Nut……	螺帽……	1
5	07872005	Plastic Pushing Block……	塑膠推塊……	1
6	07872006	Air Cylinder C.Set……	空壓管組(普通形)……	1
7	07871907	Screw (M6-1.0×16)……	螺絲……	2
8	07872008	For The pneumatic Type Of Use Rear Puller…	後托輪氣壓缸專用(大、L1)	1
9	07870547	Washer……	墊片……	2
10	07871501	Lifer Lever……	壓腳拉桿……	1
11	07871502	Lifer Lever Stop……	拉桿止架……	1
12	07870845	Screw (9/64-40×6)……	螺絲……	2
13	07872013	Air Cylinder……	空壓管(強力形)……	1
14	07872014	Nut……	螺帽……	1
15	07872015	Nut……	螺帽……	1
16	07872016	Plastic Pushing Block……	塑膠推塊……	1
17	07872017	Air Cylinder C.Set……	空壓管組(強力形)……	1

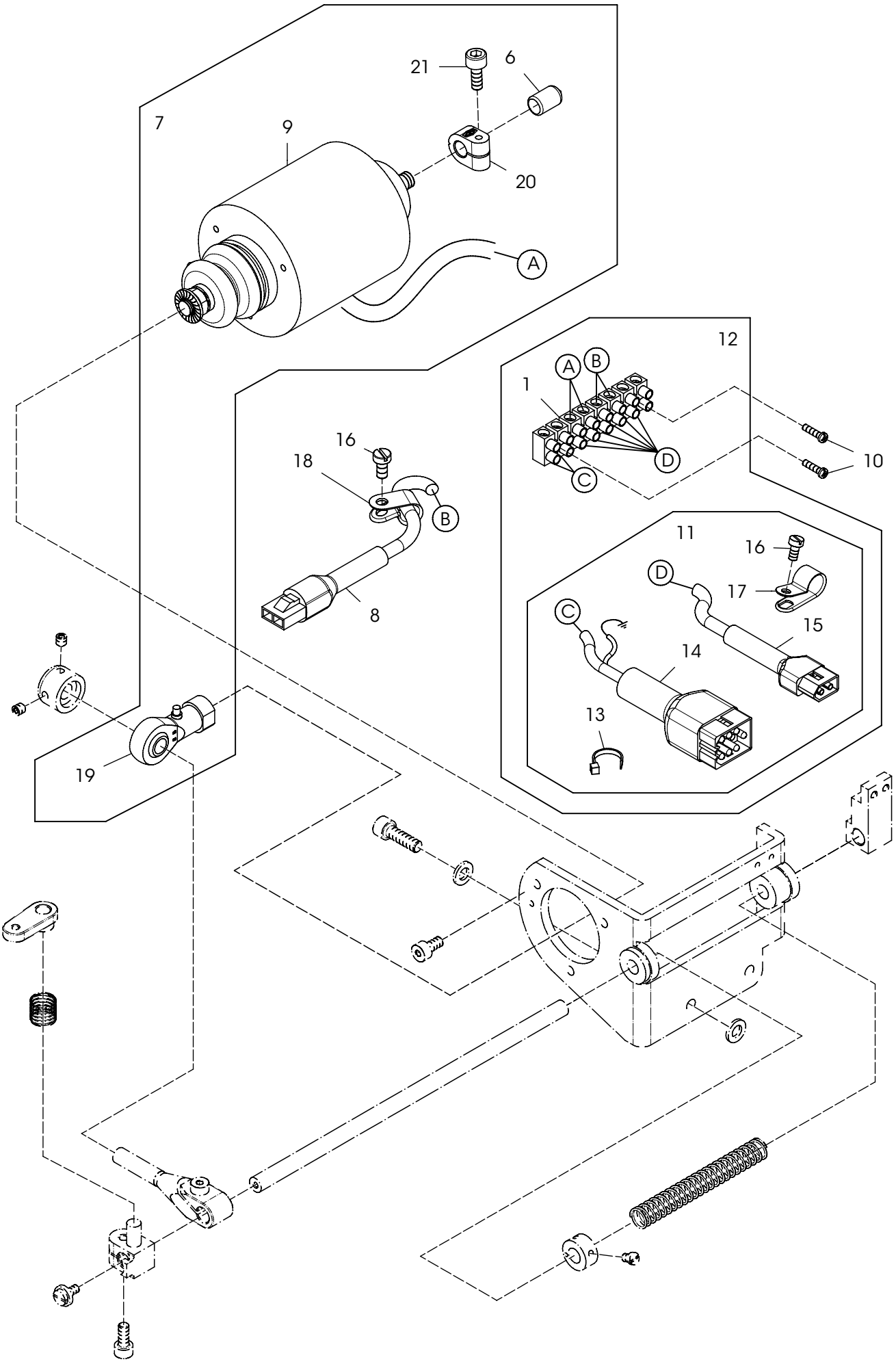
21
6
7
9
20
A
12
A
B
1
D
C
10
16
18
B
8
11
16
D
17
C
15
14
13
19

Ref. No.	Parts No.	Description	品　　名	Amt. Req.
1	07872101	Terminal Holder	端子台	1
6	07872106	Rubber Cover	膠套	1
7	07872107	Bottom Trimming Solenoid C.Set	下切刀電磁鐵組	1
8	07872108	Knife Guide, Presser Foot Lefter Adaptor Cable	上切、抬壓腳中繼線	1
9	07872109	Solenoid C.Set	電磁鐵	1
10	07872110	Screw (M3-0.5×12)	螺絲	2
11	07872111	Adaptor Cable C.Set	中繼線組	1
12	07872112	Adaptor Cable C.Set	中繼線端子組	1
13	07872113	Bridle	固定束帶	1
14	07872114	Knife Driving Motor Cable (Upper,Lower)	上、下切傳動馬達中繼線	1
15	07872115	Adaptor Cable C.Set	壓腳傳動馬達中繼線	1
16	07870125	Screw (M4-0.7×8)	螺絲	2
17	07872117	Cable Clamp (UC-2.0)	配線固定鈕	1
18	07871354	Cable Clamp (UC-1.5)	配線固定鈕	1
19	07872119	Plunger Connecting Rod	柱賽式連桿	1
20	07872120	Adjusting Collar	調整環	1
21	07870634	Screw (M5-0.8×14)	螺絲	1

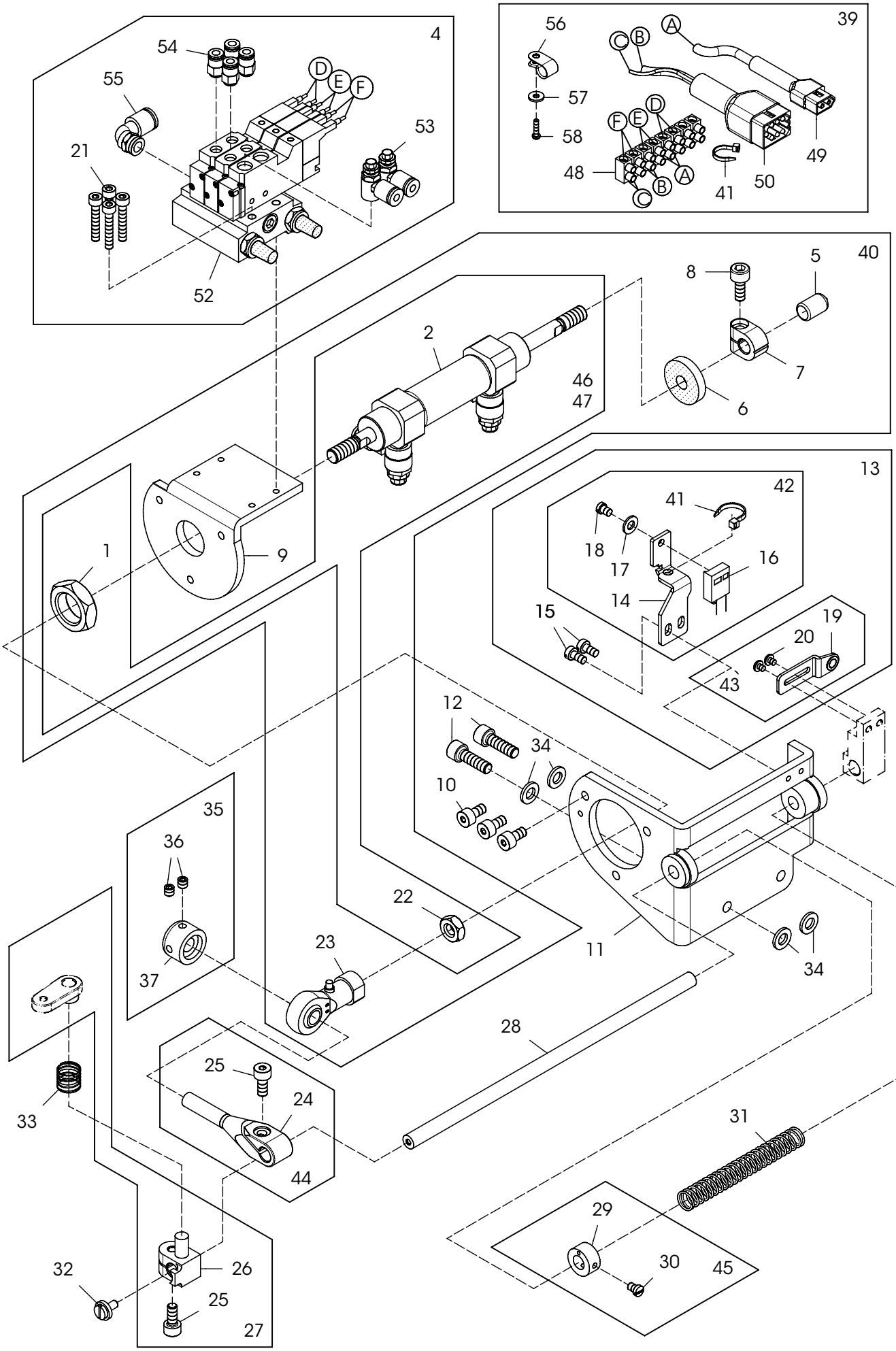
4
54
55
21
53
52
D
E
F
39
56
57
58
A
B
C
D
E
F
48
49
50
41
40
8
5
7
6
2
46
47
13
42
41
18
17
16
14
15
19
20
43
1
9
12
34
10
35
36
37
22
23
11
34
28
25
24
44
33
31
29
30
45
32
26
25
27

Ref. No.	Parts No.	Description	品　　名	Amt. Req.
1	07872201	Nut	螺帽	1
2	07872202	Air Cylinder	氣壓缸	1
4	07872204	Electromagnetic Valve, C.Set	氣壓電磁閥組	1
5	07872106	Rubber Cover	膠套	1
6	07872206	Rubber Cushion	避震膠墊	1
7	07872120	Adjusting Collar	調整環	1
8	07870634	Screw (M5-0.8×14)	螺絲	1
9	07872209	Cylinder Bracket	空壓管吊架	1
10	07870628	Screw (M5-0.8×10)	螺絲	3
11	07872211	Trimming Cylinder Support	下切刀空壓管座	1
12	07872212	Screw (M6-1×18)	螺絲	2
13	07872213	Switch , Complete Set	安全開關組	1
14	07872214	Switch Support	安全開關座	1
15	07870125	Screw (M4-0.7×8)	螺絲	2
16	07872216	Switch	安全開關	1
17	07872217	Washer	墊片	1
18	07872218	Screw (11/64-40×5)	螺絲	1
19	07872219	Switch Guide	安全開關導片	1
20	07872220	Screw (M3-0.5×4.7)	螺絲	2
21	07872221	Screw (M4-0.7×25)	螺絲	4
22	07872222	Nut	螺帽	1
23	07872223	Plunger Connecting Rod	柱塞式連桿	1
24	07872224	Plunger	柱塞接頭	1
25	07872225	Screw (M5-0.8×12)	螺絲	2
26	07872226	Connecting Block	連結滑塊	1
27	07872227	Connecting Block C.Set	連結滑塊組	1
28	07872228	Cylinder Return Shaft	空壓管復進軸	1
29	07870832	Collar	軸環	1
30	07870833	Screw (M4.5-0.75×5.5)	螺絲	1
31	07872231	Cylinder Return Spring	空壓管復進簧	1
32	07872232	Screw (M4-0.7×8)	螺絲	1
33	07872233	Spring	彈簧	1
34	07870547	Washer	墊片	4
35	07872235	Plunger Stop C.Set	柱塞止環組	1
36	07870648	Screw (M5-0.8×5)	螺絲	2
37	07872237	Plunger Stop	柱塞止環	1
39	07872239	Terminal C.Set	端子組	1
40	07872240	Electromagnetic Valve,C.Set	氣壓閥整組	1

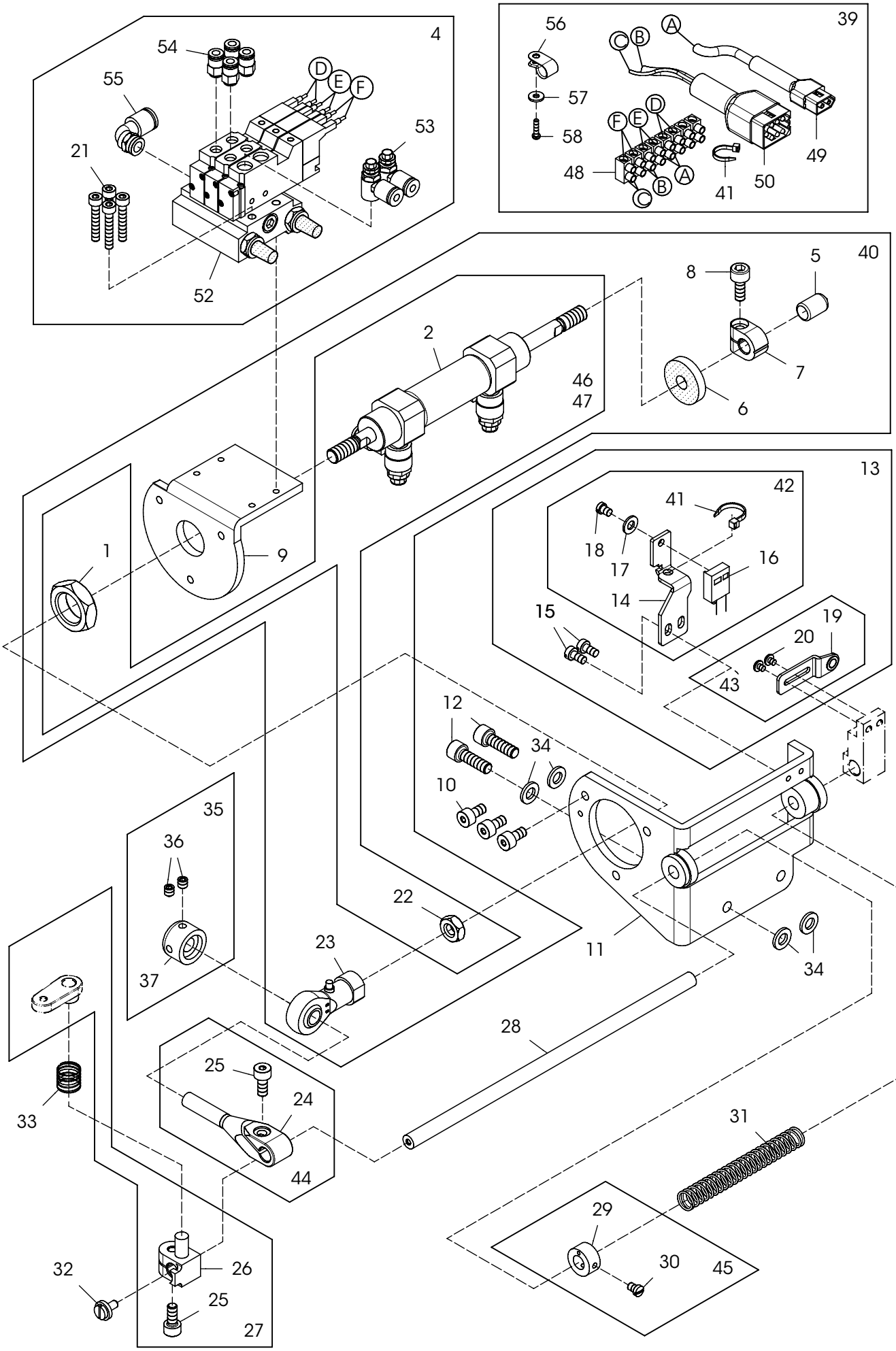
4
54
55
21
53
52
D
E
F
39
56
57
58
A
B
C
D
E
F
48
49
50
41
40
8
5
7
6
2
46
47
13
42
41
18
17
16
14
15
19
20
43
1
9
12
34
10
35
36
37
22
23
11
34
28
25
24
44
33
31
29
30
45
32
26
25
27

Ref. No.	Parts No.	Description	品　　名	Amt. Req.
41	07872113	Bridle	束帶	2
42	07872242	Switch,Support C.Set	安全開關座組	1
43	07872243	SwitchGuide C.Set	安全開關導片組	1
44	07872244	Plunger C.Set	柱塞接頭組	1
45	07872245	Collar C.Set	軸環組	1
46	07872246	For Generally Pneumatic Type	一般風切	1
47	07872247	For Roller Pneumatic Type	滾輪風切	1
48	07872248	Terminal	端子	1
49	07872249	Terminal	押腳端子	1
50	07872250	Terminal	上下切端子	1
52	07872252	Solenoid	電磁閥	1
53	07871807	Elbow Connector	肘形接頭	2
54	07872254	Speed Connector	電磁閥調速接頭	4
55	07872255	Connector	電磁閥底座接頭	1
56	07871741	Cable Clamp (UC-0.5)	配線固定鈕	1
57	07870323	Washer	墊片	1
58	07872110	Screw (M3-0.5×5.5)	螺絲	1

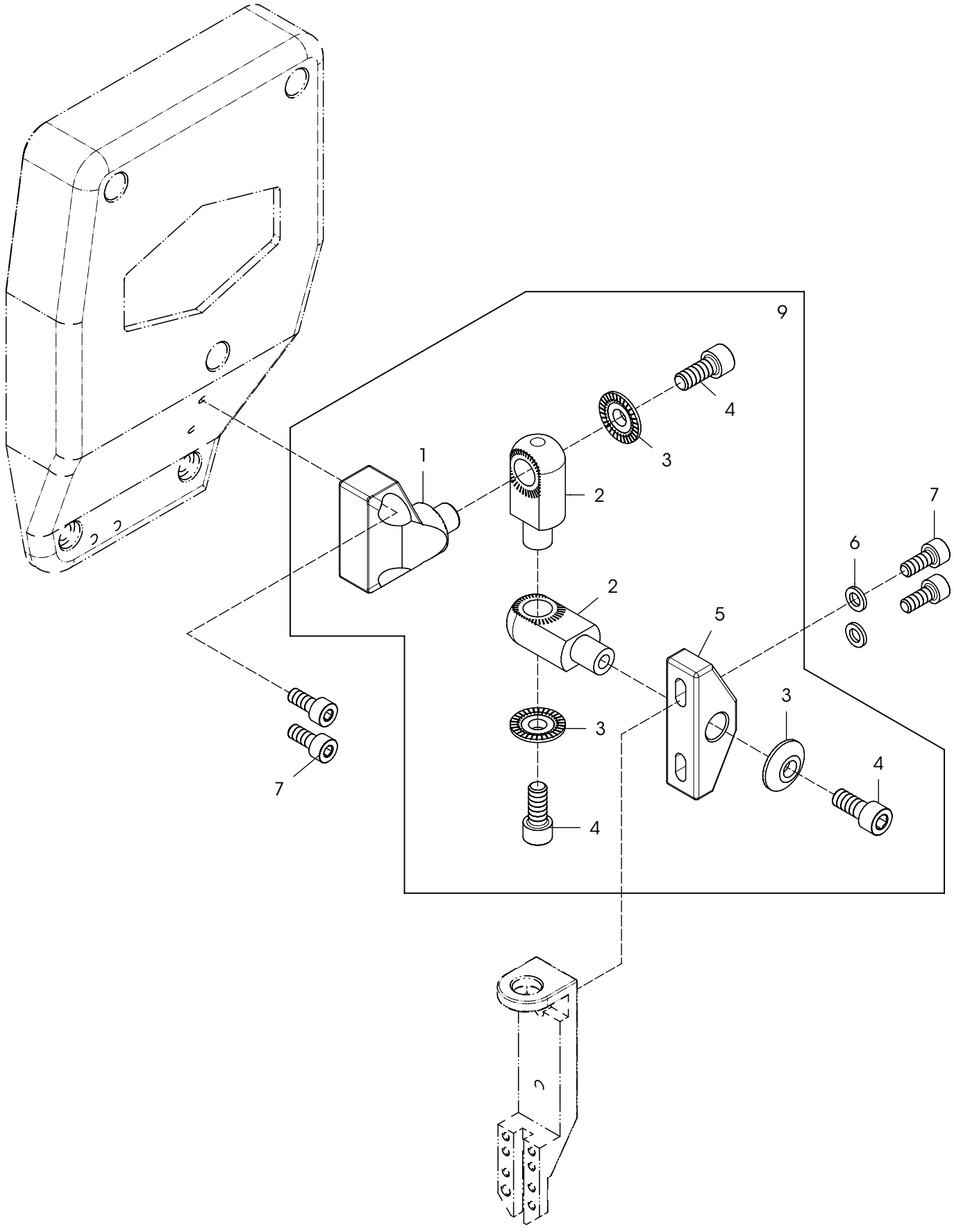
9
1
2
3
4
2
5
6
7
3
4
7
3
4

TOP TRIMMER UNIVERSAL ADAPTER MECHANISM 上切刀萬向接頭機構 23

Ref. No.	Parts No.	Description	品 名	Amt. Req.
1	07872301	Top Trimmer Fixed Block……	上切刀固定座……	1
2	07872302	Universal Joint……	萬向接頭……	2
3	07872303	Position Washer……	定位墊圈……	3
4	07872304	Screw (M5-0.8×12)……	螺絲……	3
5	07872305	Up & Down Position Block……	上下定位塊……	1
6	07870650	Washer……	墊片……	2
7	07870202	Screw (M4-0.7×10)……	螺絲……	4
9	07872309	Top Trimmer Universal Adapter C. Set……	上切刀萬向接頭組……	1

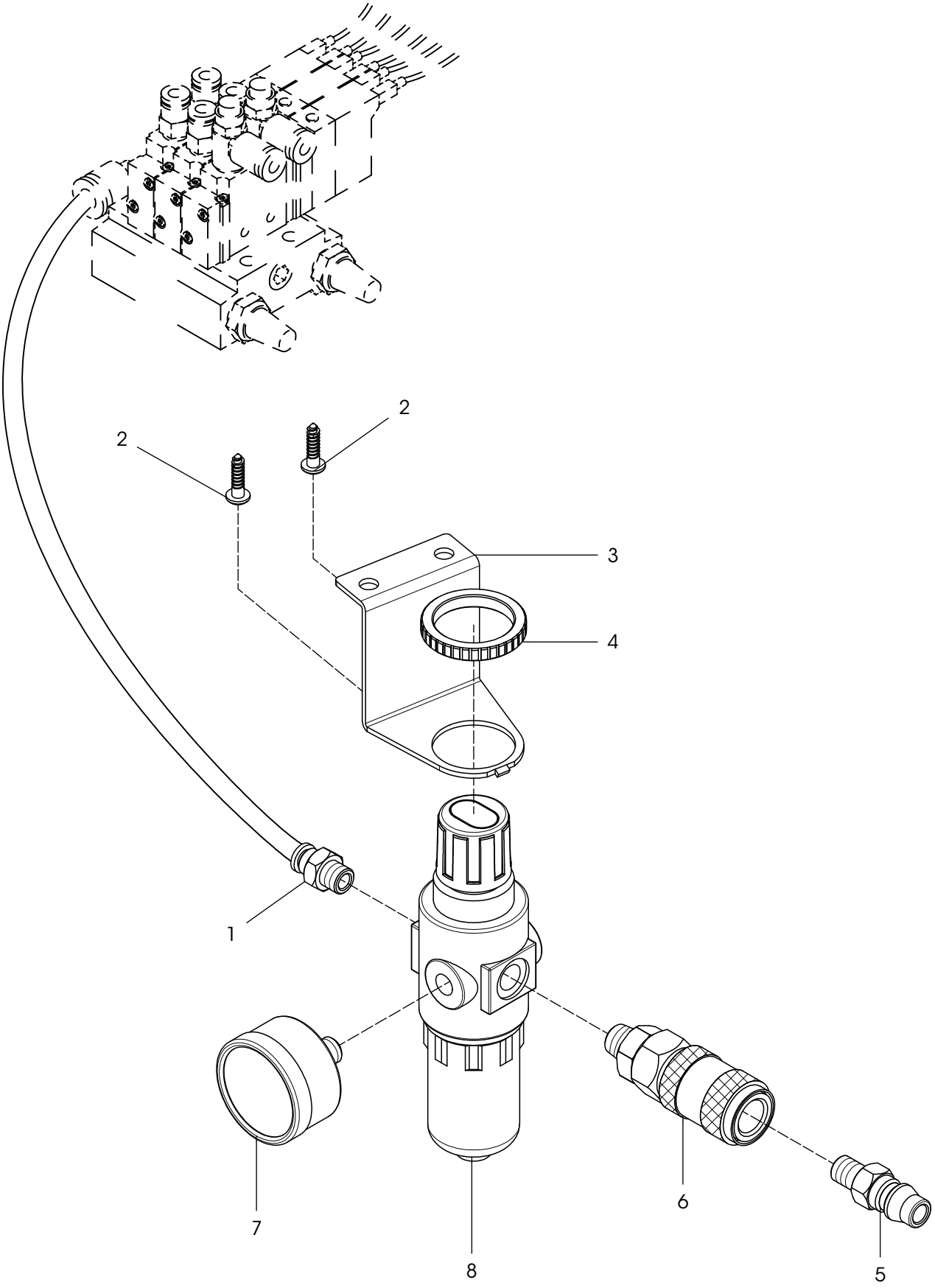
2
2
3
4
1
7
8
6
5

Ref. No.	Parts No.	Description	品 名	Amt. Req.
1	07401524	Coupler	轉接頭	1
2	07401508	Wood Screw	木螺絲	2
3	07403203	Bracket	托架	1
4	07401519	Screw Ring	螺環	1
5	07403205	Coupler	轉接頭	1
6	07403206	Connect Valve	氣壓閥	1
7	07401515	Gauge	氣磅表	1
8	07401513	Pneumatic Regulator	氣壓調節器	1

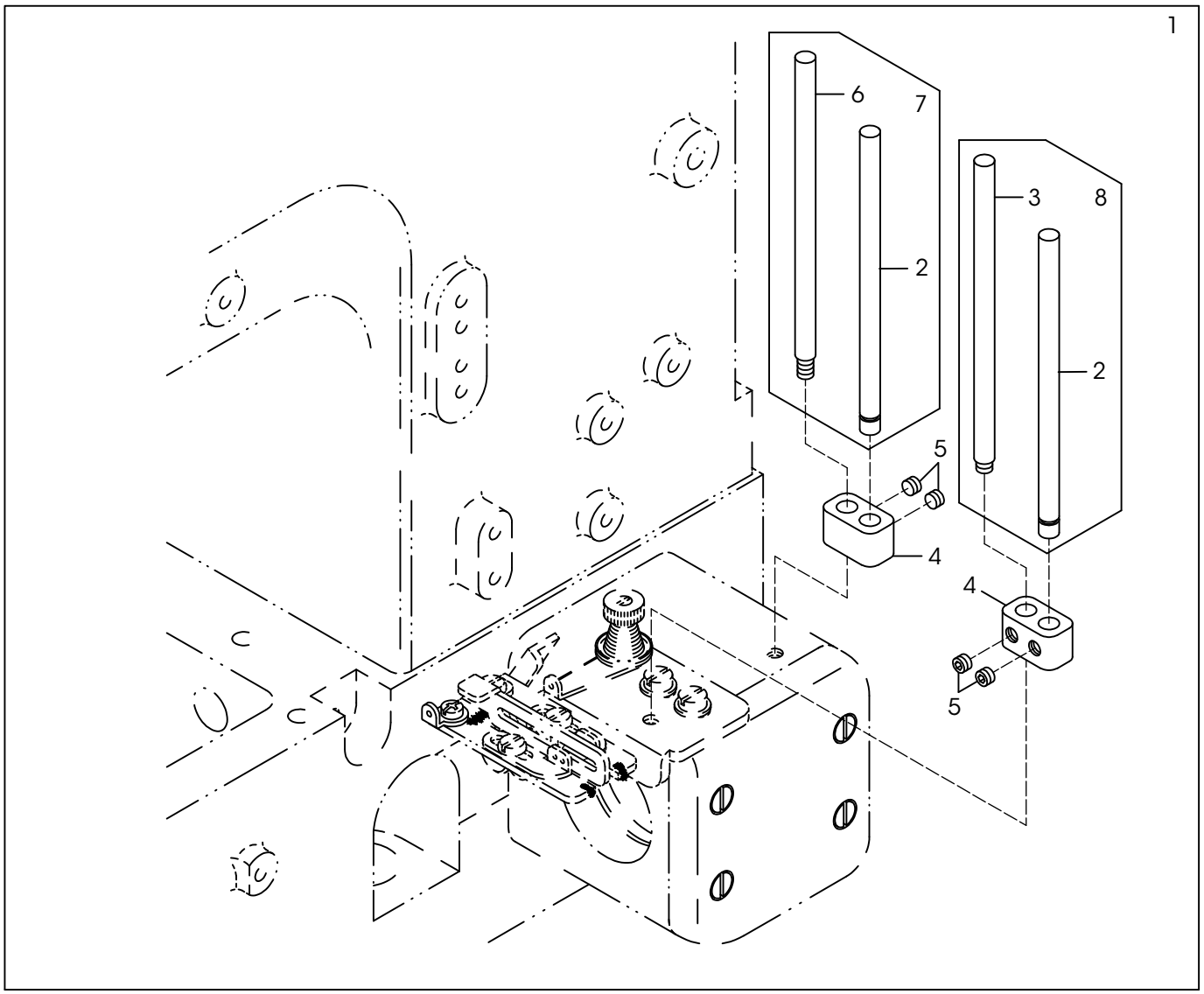
1
6
7
3
8
2
2
5
4
4
5

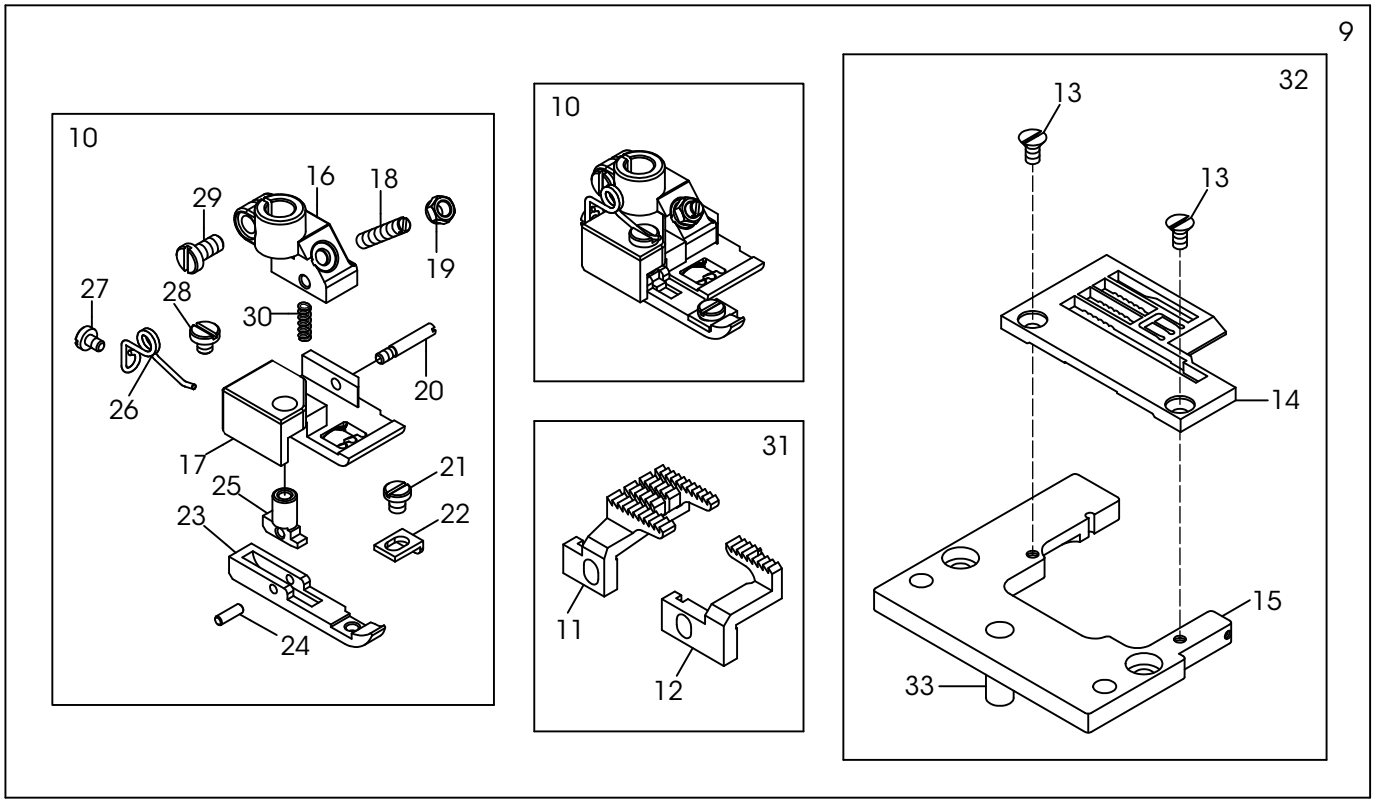
9
10
16
18
29
19
27
28
30
20
26
17
21
25
22
23
24
10
31
11
12
32
13
13
14
15
33

Ref. No.		Parts No.	Description	品 名	Amt. Req.
1		07872501	Binding Cloth Guider C. Set	滾條布導架組	1
2		07872502	Binding Cloth Tension Bar	滾條布張力調整桿	2
3		07872503	Binding Cloth Guider Bar	滾條布導桿	1
4		07872504	Guider Bar Holder	導桿座	2
5		07872505	Screw (11/64-40×3.2)	螺絲	4
6		07872506	Binding Cloth Guider Bar	滾條布導桿	1
7		07872507	Binding Cloth Guider Bar C.Set	滾條布導桿組	1
8		07872508	Binding Cloth Guider Bar C.Set	滾條布導桿組	1
9		07872509	"Q" Device Gauge Set	標準喇叭包邊規格組	1
10		★	Presser Foot C.Set	押腳	1
11	★	07872511	Main Feed Dog	主齒	1
12	★	07872512	Differential Feed Dog	差動齒	1
13		07870232	Screw (M3-0.5×6)	螺絲	2
14		★	Needle Plate	針鈑	1
15	★	07872515	Needle Plate Stand	針鈑台	1
16		07872516	Presser Head	押腳頭	1
17		07872517	Plate	本體壓板	1
18		07872518	Scwer (1/8"-44×18.5)	螺絲	1
19		07872519	Hexagon Nut	六角螺帽	1
20		07872520	Bolt	螺栓	1
21		07872521	Scwer (1/8"-44×3)	螺絲	1
22		07872522	Fender Plate	擋片	1
23		07872523	Sideways Presser Plate	側邊壓板	1
24		07872524	Fixed Axle	固定軸	1
25		07872525	Spring Base	彈簧座	1
26		07872526	Spring	彈簧	1
27		07872527	Scwer (3/32"-56×3)	螺絲	1
28		07872528	Scwer(1/8"-44×4)	螺絲	1
29		07872529	Scwer(9/64"-40×9)	螺絲	1
30		07872530	Spring	彈簧	1
31		07872531	Main Feed Dog	勾齒組	1
32		07872532	Needle Plate C.Set	針板組	1
33		07870220	Knock Pin	頂出銷	1

★ 請參照附件一、附件二【標準規格件】

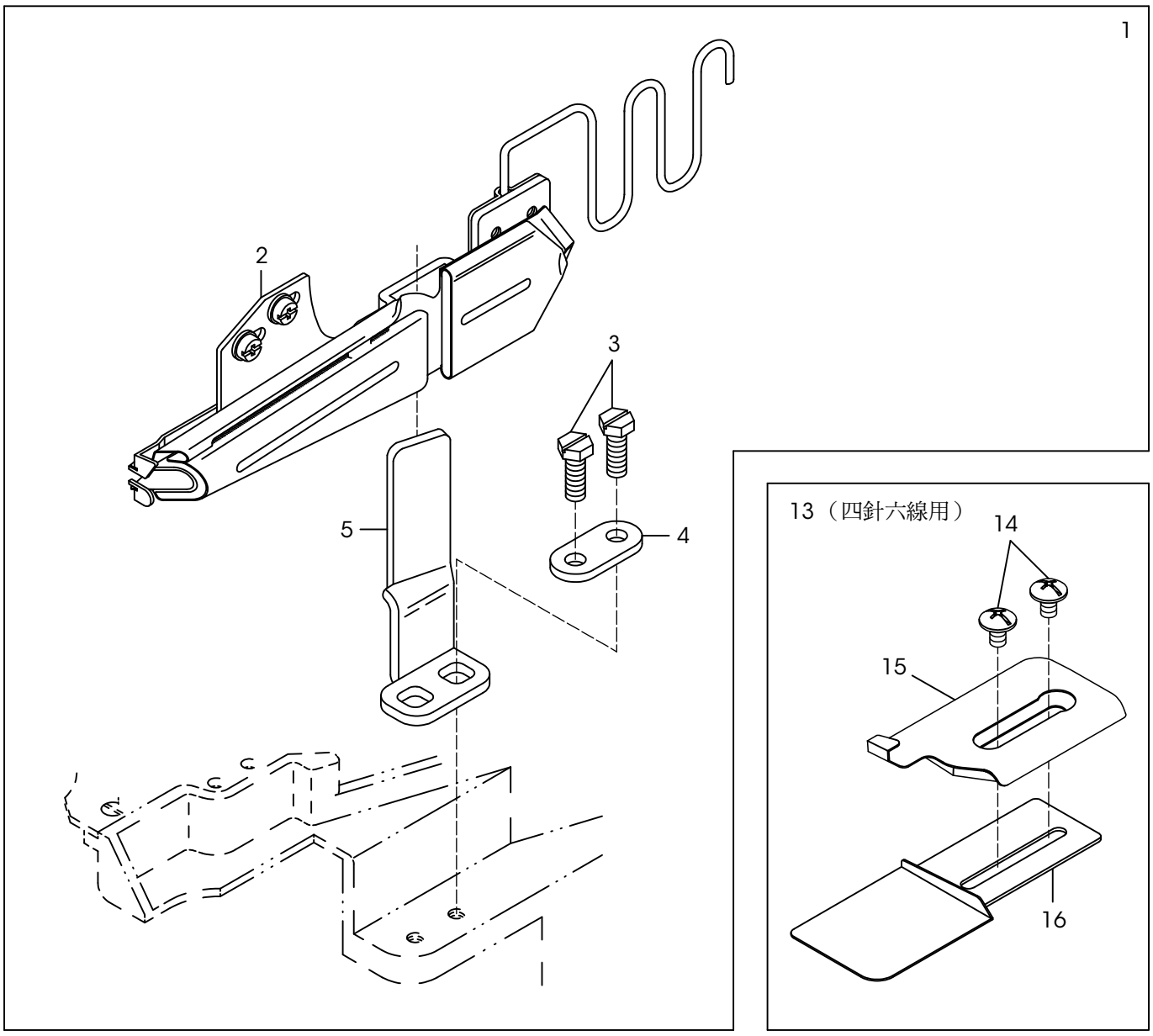
1
2
3
4
5
13（四針六線用）
14
15
16

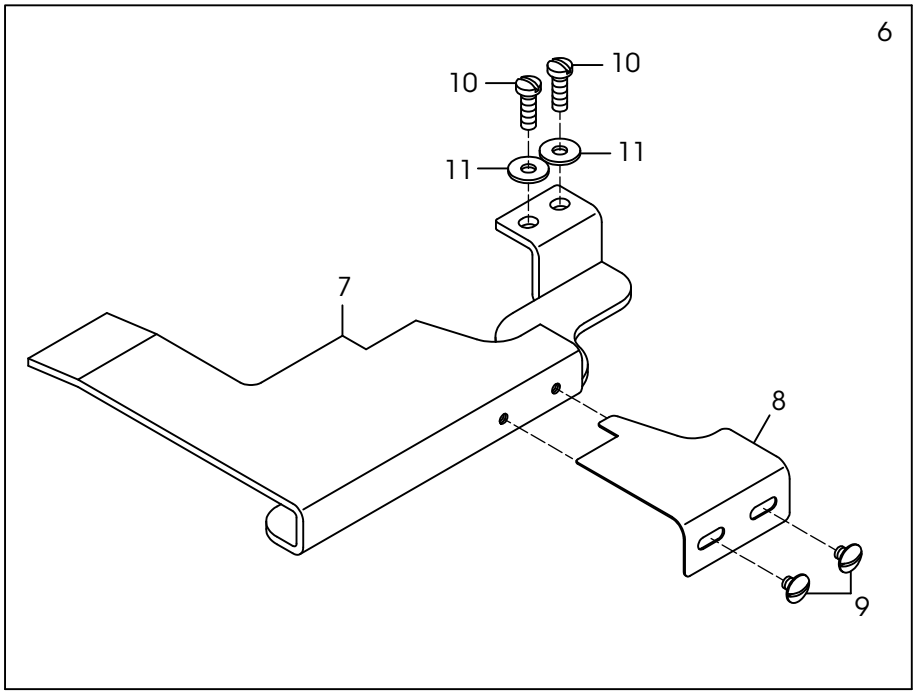
6
10
10
11
11
7
8
9

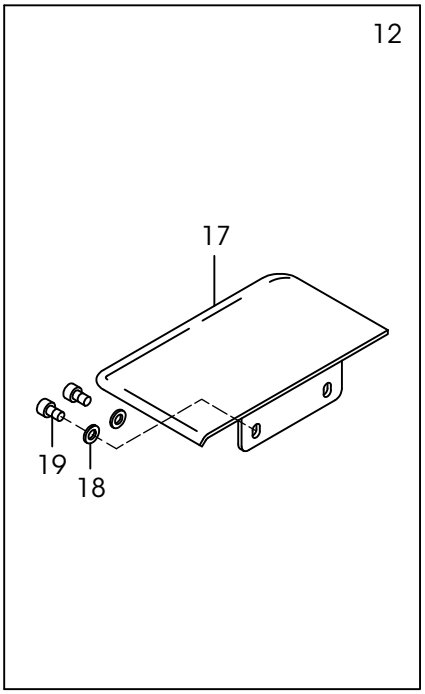
12
17
19
18

Ref. No.	Parts No.	Description	品　　名	Amt. Req.
1	07872601	Binder C.Set	標準喇叭包邊組	1
2	07872602	Binder	喇叭.包邊器(同一般平台式支針出喇叭)	1
3	07872603	Screw (M5-0.8×14)	螺絲	2
4	07872604	Washer	墊片	1
5	07872605	Binder Mount	喇叭・包邊器組	1
6	07872606	Front Subplate C.Set	前包邊輔助板組	1
7	07872607	Front Subplate	前包邊輔助板	1
8	07872608	Feeding Subplate	入口輔助板	1
9	07872609	Screw (9/64-40×4)	螺絲	2
10	07870102	Screw (M4-0.7×12)	螺絲	2
11	07870323	Washer	墊片	2
12	07872612	Rear Subplate C.Set	後包邊輔助板組	1
13	07872613	Cloth Board C.Set	布板組(四針六線用)	1
14	07872614	Scwer (M5-0.8×8)	螺絲	2
15	07872615	Cloth Board (Upper)	上布板	1
16	07872616	Cloth Board (Lower)	下布板	1
17	07872617	Subplate	輔助板	1
18	07870547	Washer	墊片	2
19	07872619	Scwer (M6-1.0×10)	螺絲	2

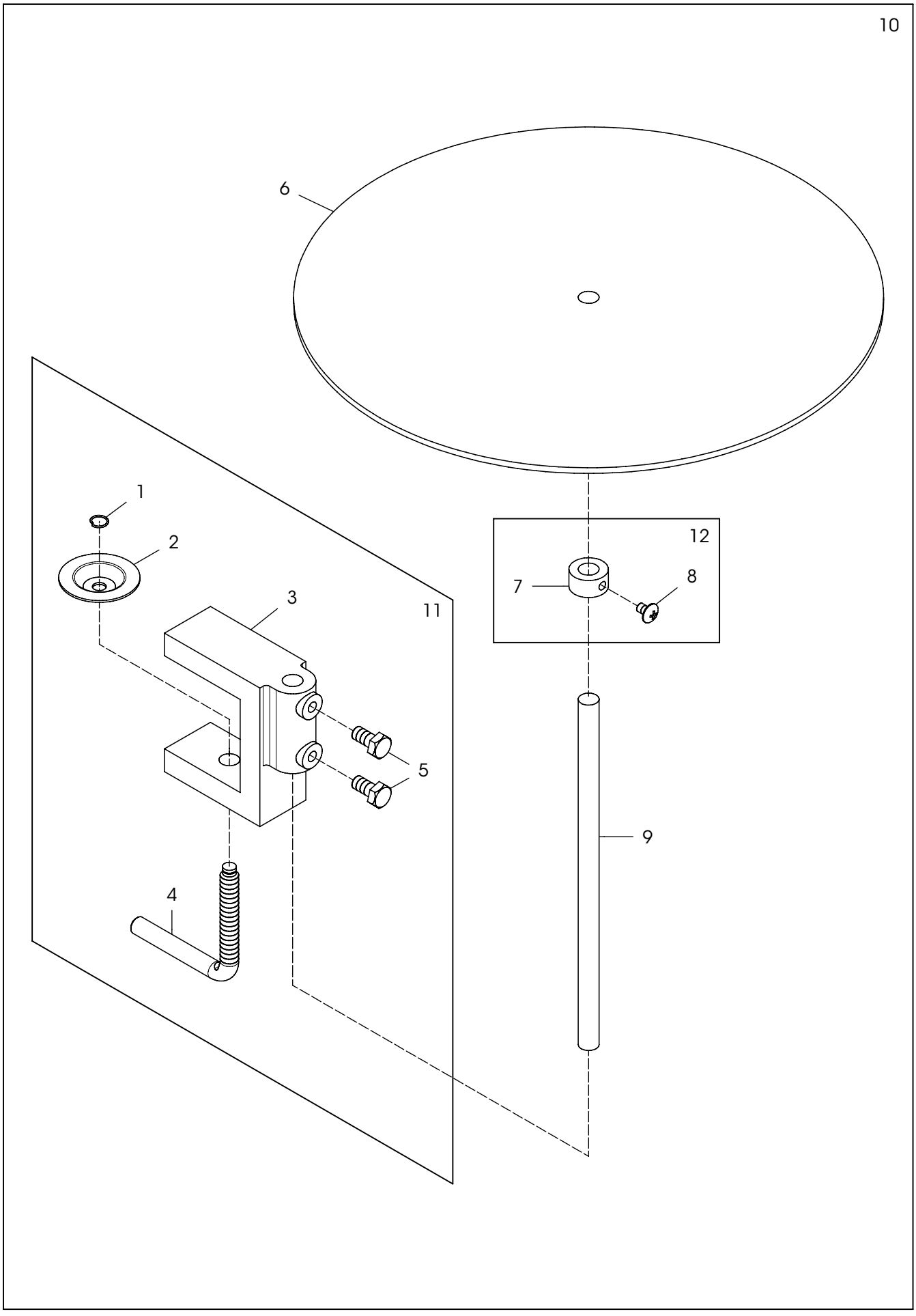
10
6
1
2
3
11
12
7
8
5
9
4

Ref. No.	Parts No.	Description	品　　名	Amt. Req.
1	07872701	Pin	插銷	1
2	07872702	Fixed Disc	固定圓盤	1
3	07872703	Fixture	固定夾架	1
4	07872704	Fixing Lever	固定螺桿	1
5	07872705	Screw(1/4-20×12.5)	螺絲	2
6	07872706	Tope Disc	布條盤	1
7	07872707	Collar	軸環	1
8	07872708	Scwer (M4-0.7×6.5)	螺絲	1
9	07872709	Tape Disc Post	布條盤軸	1
10	07872710	Tape Disc C.Set	布條盤組	1
11	07872711	Fixture C.Set	固定夾架組	1
12	07872712	Collar C.Set	軸環組	1

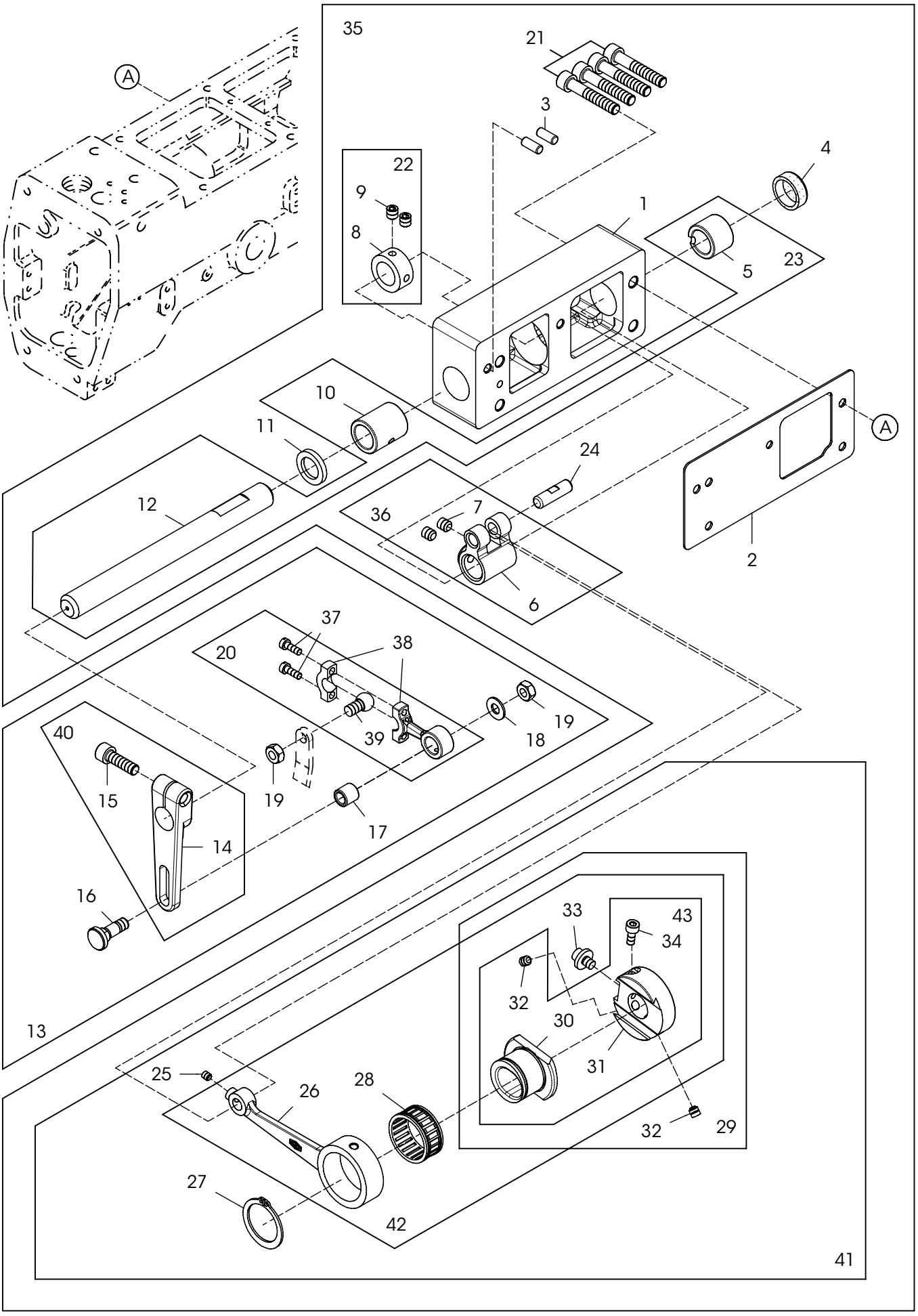
35
21
3
4
22
9
8
1
5
23
A
10
11
24
12
36
7
2
6
37
38
20
19
18
39
40
15
19
17
14
16
33
43
34
32
30
31
13
25
26
28
32
29
27
42
41

Ref. No.	Parts No.	Description	品　　名	Amt. Req.
1	07872801	Upper Feed Roller Shaft Bracket	上滾輪傳動軸托架	1
2	07872802	Gasket	密合墊片	1
3	07872803	Knock Pin	頂出銷	2
4	07870421	Seal Plug	止油封塞	1
5	07872805	Roller Shaft Bushing (Right)	滾輪動軸襯套 (右)	1
6	07872806	Upper Feed Roller Shaft Lever	上滾輪傳動軸槓桿	1
7	07870543	Screw (M6-1×6)	螺絲	2
8	07872808	Collar	軸環	1
9	07872809	Screw (11/64-40×4)	螺絲	2
10	07872810	Roller Shaft Bushing (Left)	滾輪動軸襯套 (左)	1
11	07872811	Oil Seal	油封	1
12	07872812	Upper Feed Roller Shaft	上滾輪傳動軸	1
13	07872813	Upper Feed Roller Lever Rod C.Set	上滾輪傳動拉桿	1
14	07872814	Upper Feed Roller Lever	上滾輪拉桿	1
15	07870546	Screw (M6-1×20)	螺絲	1
16	07872816	Upper Feed Roller Lever Pin	上滾輪拉桿插銷	1
17	07872817	Bushing	襯套	1
18	07872818	Washer	墊片	1
19	07872819	Nut	螺帽	2
20	07872820	Connecting Rod	連桿	1
21	07872821	Screw (M6-1×35)	螺絲	4
22	07872822	Collar C.Set	軸環組	1
23	07872823	Upper Feed Roller Shaft Bracket C.Set	上滾輪傳動軸托架組	1
24	07872824	Upper Feed Roller Driving Rod Pin	上滾輪驅動拉桿插銷	1
25	07870229	Screw (M4-0.7×4)	螺絲	1
26	07872826	Upper Feed Roller Driving Rod	上滾輪驅動拉桿	1
27	07871106	Retaining Ring	扣環	1
28	07871107	Roller Bearing	滾動軸承	1
29	07872829	Upper Feed Roller Regulator C.Set	上滾輪調節器組	1
30	07872830	Upper Feed Roller Eccentric	上滾輪偏心輪	1
31	07872831	Upper Feed Roller Regulator	上滾輪調節器	1
32	07872832	Screw (M5-0.8×5)	螺絲	2
33	07872833	Adjusting Screw (M5-0.8×6)	調節螺絲	1
34	07871910	Screw (M4-0.7×8)	螺絲	1
35	07872835	Upper Feed Roller Shaft Bracket C. Set	上滾輪傳動軸托架組	1
36	07872836	Upper Fdde Roller Shaft Lever C.Set	上滾輪傳動軸槓桿組	1
37	07872837	Screw (M3-0.5×10)	螺絲	2
38	07872838	Feed Lift Connection	傳動珠殼	1
39	07872839	Feed Drive Eccentric Ball	傳動珠子	1
40	07872840	Upper Feed Roller Lever C.Set	上滾輪拉桿組	1
41	07872841	Upper Feed Roller Eccentric Rod C.Set	上滾輪偏心組	1
42	07872842	Upper Feed Roller Driving Rod C.Set	上滾輪驅動拉桿組	1
43	07872843	Upper Feed Roller Regulator C.Set	上滾輪調節器組	1

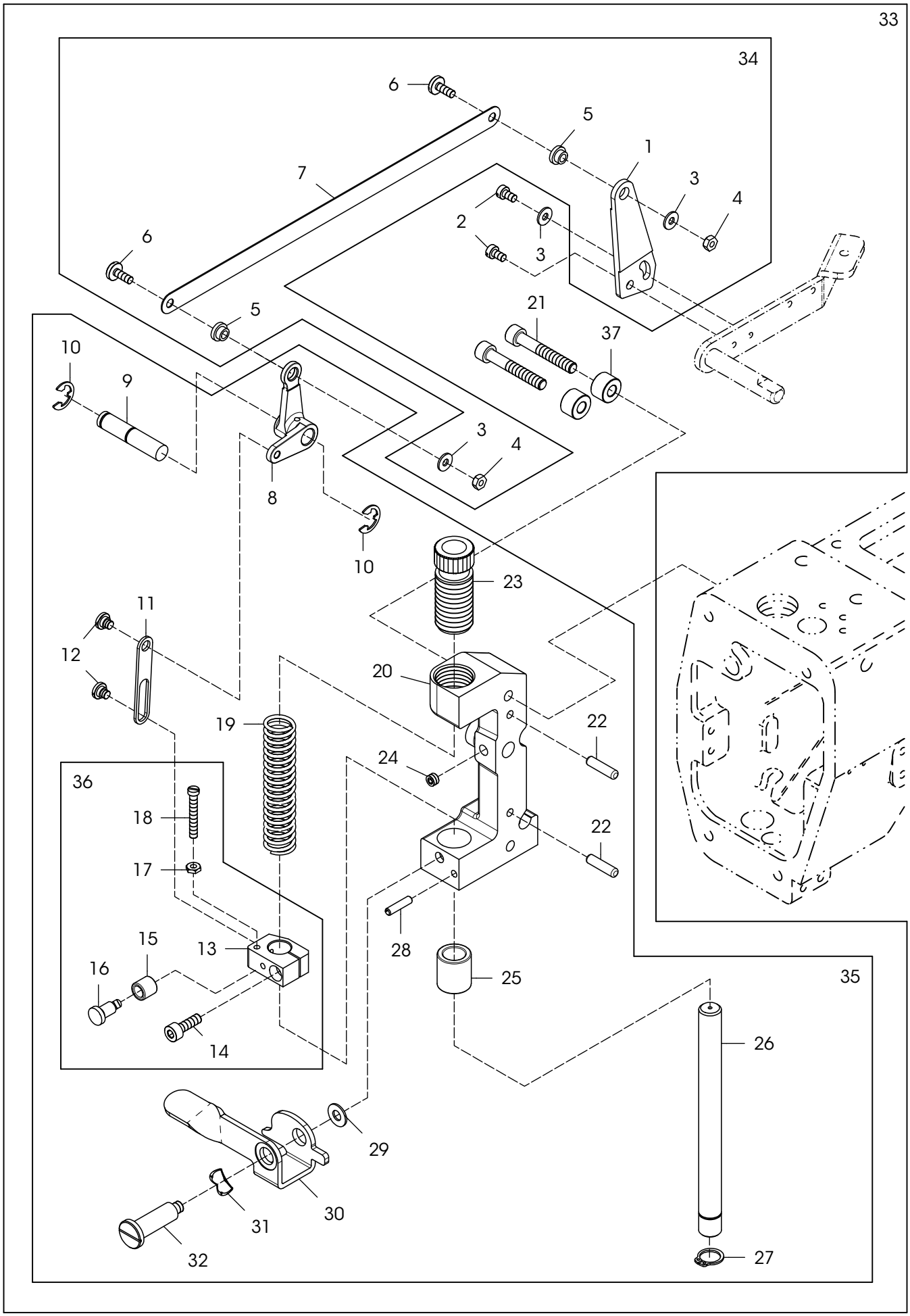
33
34
6
5
1
7
3
4
2
3
6
5
21
37
10
9
3
4
8
10
23
11
12
20
19
22
24
36
18
22
17
15
13
16
28
25
35
26
14
29
30
31
32
27

Ref. No.	Parts No.	Description	品 名	Amt. Req.
1	07872901	Upper Feed Roller Lifter (Right).....	上滾輪升降桿 (右).....	1
2	07870624	Screw (11/64-40×10).....	螺絲.....	2
3	07870323	Washer.....	墊片.....	3
4	07872904	Nut.....	螺帽.....	2
5	07872905	Flexible Wire Clamp Bushing.....	可動式襯套.....	2
6	07872906	Screw (11/64-40×11).....	螺絲.....	2
7	07872907	Lifter Connecting Plate (Long)	升降桿連接拉板(長).....	1
8	07872908	Upper Feed Roller Lifter (Left).....	上滾輪升降桿 (左).....	1
9	07872909	Upper Feed Roller Lifter Pin.....	上滾輪升降桿插銷.....	1
10	07872910	Retaining Ring.....	扣環.....	2
11	07872911	Lifter Connecting Plate (Short).....	升降桿連接拉板(短).....	1
12	07872912	Screw (3/16-32×3).....	螺絲.....	2
13	07872913	Roller Press Bar Bracket.....	滾輪壓桿托架.....	1
14	07872914	Screw (M5-0.8×16).....	螺絲.....	1
15	07872817	Bushing.....	襯套.....	1
16	07872916	Screw (11/64-40×15).....	螺絲.....	1
17	07872917	Nut.....	螺帽.....	1
18	07872918	Stop Screw (11/64-40×28).....	止動螺絲.....	1
19	07872919	Roller Press Spring.....	滾輪壓力彈簧.....	1
20	07872920	Upper Feed Roller Bracket.....	上滾輪托架.....	1
21	07872921	Screw (M6-1×40).....	螺絲.....	2
22	07872922	Knock Pin.....	頂出銷.....	2
23	07872923	Roller Press Bar Bushing (Upper).....	滾輪壓桿襯套(上).....	1
24	07870214	Screw (M6-1×4).....	螺絲.....	1
25	07872925	Roller Press Bar Bushing (Lower).....	滾輪壓桿襯套(下).....	1
26	07872926	Upper Feed Roller Press Bar.....	上滾輪壓力桿.....	1
27	07872927	Retaining Ring.....	扣環.....	1
28	07872928	Stop Pin.....	止動銷.....	1
29	07872818	Washer.....	墊片.....	1
30	07872930	Upper Feed Roller Hand Lifting Lever.....	上滾輪手動升降桿.....	1
31	07872931	Corrugated Washer.....	波形墊片.....	1
32	07872932	Screw (M6-1×3.4)	螺絲.....	1
33	07872933	Upper Feed Roller Bracket , C. Set.....	上滾輪托架組.....	1
34	07872934	Upper Feed Roller Lifter C.Set.....	上滾輪升降桿組.....	1
35	07872935	Upper Feed Roller PressBar C.Set.....	上滾輪壓力桿組.....	1
36	07872936	Roller Press Bar Bracket C.Set.....	滾輪壓桿托架組.....	1
37	07872937	Bushing.....	襯套(9mm).....	2

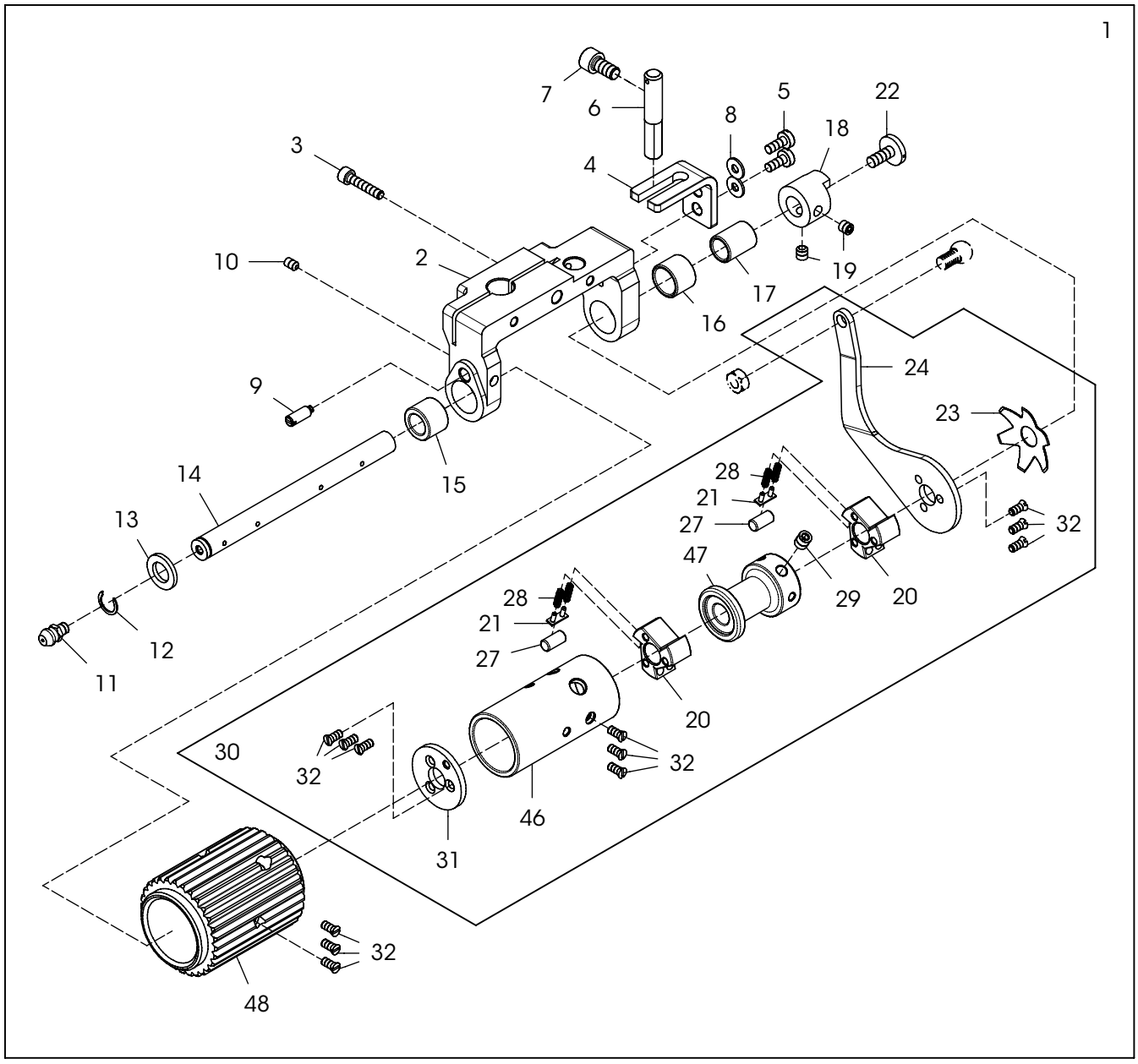

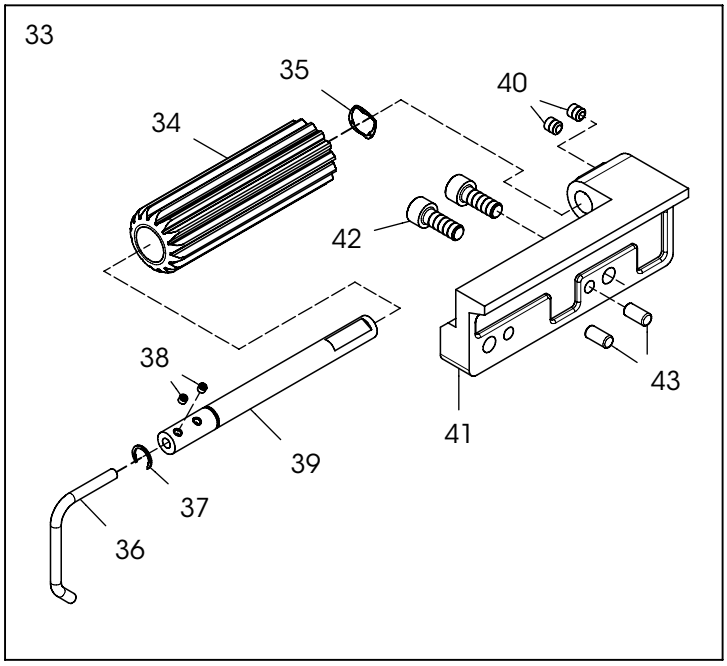

RUBBER ROLLER

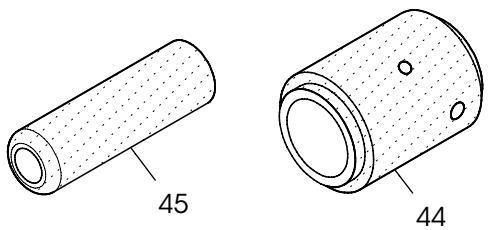

Ref. No.	Parts No.	Description	品　　名	Amt. Req.
1	07873001	Upper Feed Roller & Yoke C. Set	上滾輪和軛架組	1
2	07873002	Upper Feed Roller Yoke	上滾輪軛架	1
3	07870546	Screw (M6-1×20)	螺絲	1
4	07873004	Upper Feed Roller Yoke Guide	上滾輪導板軛	1
5	07870706	Screw (M4-0.7×10)	螺絲	2
6	07873006	Upper Feed Roller Yoke Pin	上滾輪軛插銷	1
7	07873007	Screw (M6-1×12)	螺絲	1
8	07870323	Washer	墊片	2
9	07873009	Screw (9/64-40×2.5)	螺絲	1
10	07873010	Screw (M4-0.7×6)	螺絲	1
11	07870648	Screw (M5-0.8×5)	螺絲	1
12	07873012	Retaining Ring	扣環	1
13	07873013	Thrust Ring	止推軸環	1
14	07873014	Clutch Driving Shaft	離合器傳動軸	1
15	07873015	Clutch Driving Shaft Bushing (Left)	離合器傳動軸襯套 (左)	1
16	07873016	Clutch Driving Shaft Bushing (Right)	離合器傳動軸襯套 (右)	1
17	07873017	Clutch Tension Sleeve	離合器張力套	1
18	07873018	Adjusting Collar	調整環	1
19	07870648	Screw (M5-0.8×5)	螺絲	2
20	07873020	Clutch	驅動離合器	2
21	07873021	Clutch Spring Seat	離合器彈簧座	6
22	07873022	Screw (M5-0.8×12)	螺絲	1
23	07873023	Clutch Tension Spring	離合器張力壓簧	1
24	07873024	Clutch Driving Lever	離合器驅動拉環	1
27	07873027	Clutch Roller	離合器軸心	6
28	07873028	Clutch Spring	離合器彈簧	12
29	07870502	Screw (M6-1×8)	螺絲(尖底)	1
30	07873030	Clutch, Complete Set	離合器組	1
31	07873031	Clutch Check Plate	離合器擋板	1
32	07873032	Screw (9/64-40×8)	螺絲	12
33	07873033	Lower Feed Roller Support , C. Set	下滾輪支架組	1
34	07873034	Lower Feed Roller (15 Teeth)	下滾輪 (15齒)	1
35	07873035	Wave Washer	波形墊片	1
36	07873036	Lower Feed Roller Guide	下滾輪導桿	1
37	07873037	Retaining Ring	扣環	1
38	07870880	Screw (M3-0.5×3)	螺絲	2
39	07873039	Lower Feed Roller Shaft	下滾輪主軸	1
40	07873040	Screw (M5-0.8×5)	螺絲	2

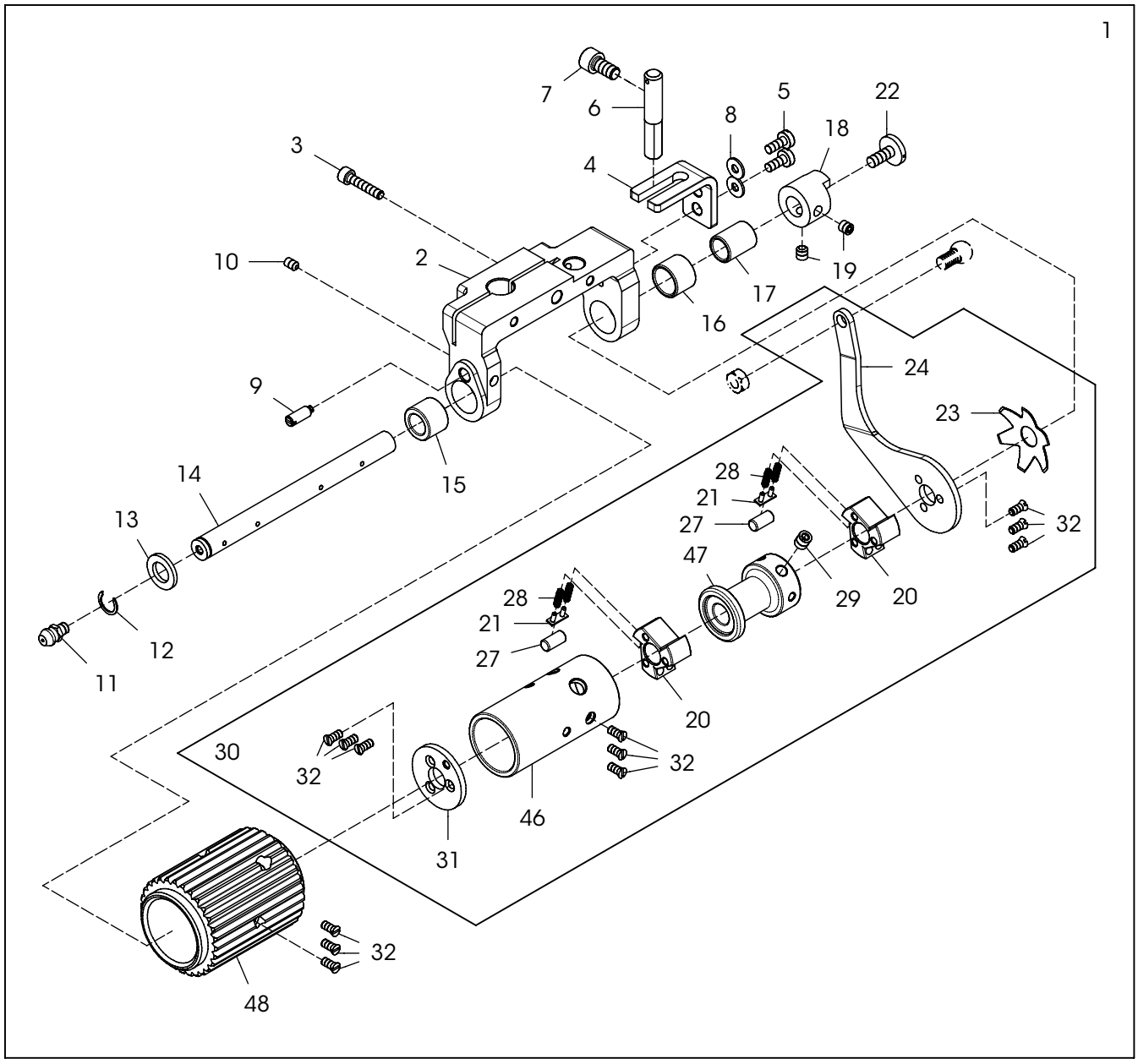

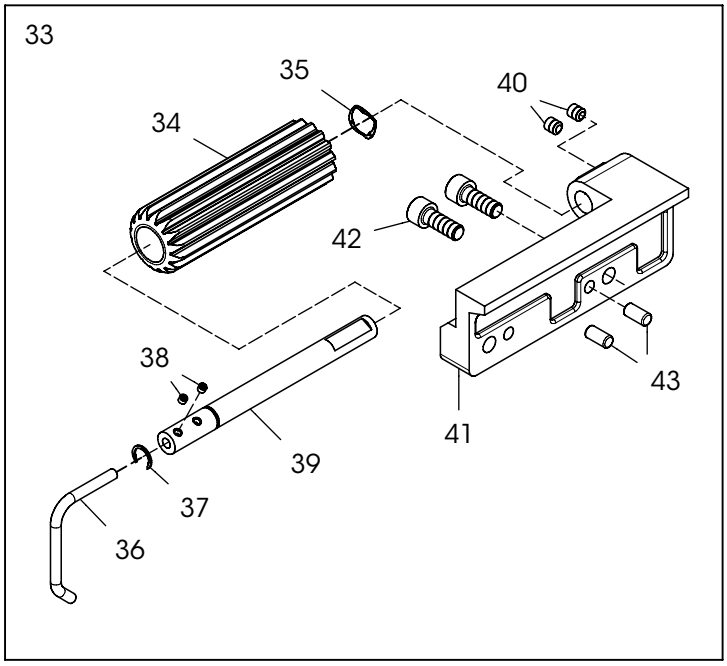

RUBBER ROLLER

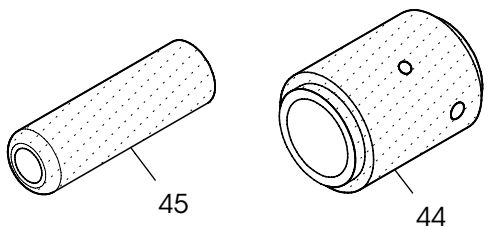

Ref. No.	Parts No.	Description	品 名	Amt. Req.
41	07873041	Lower Feed Roller Bracket	下滾輪托架	1
42	07870915	Screw (M6-1×16)	螺絲	2
43	07873043	Knock Pin	頂出銷	2
44	07873044	Upper Rubber Roller	上橡膠平面滾輪	1
45	07873045	Lower Rubber Roller	下橡膠平面滾輪	1
46	07873046	Clutch Sleeve	離合器襯套	1
47	07873047	Clutch Spacer	離合器隔片	1
48	07873048	Upper Feed Roller (30 Teeth)	上滾筒 (30齒)	1

1（五線用）
19（六線用）

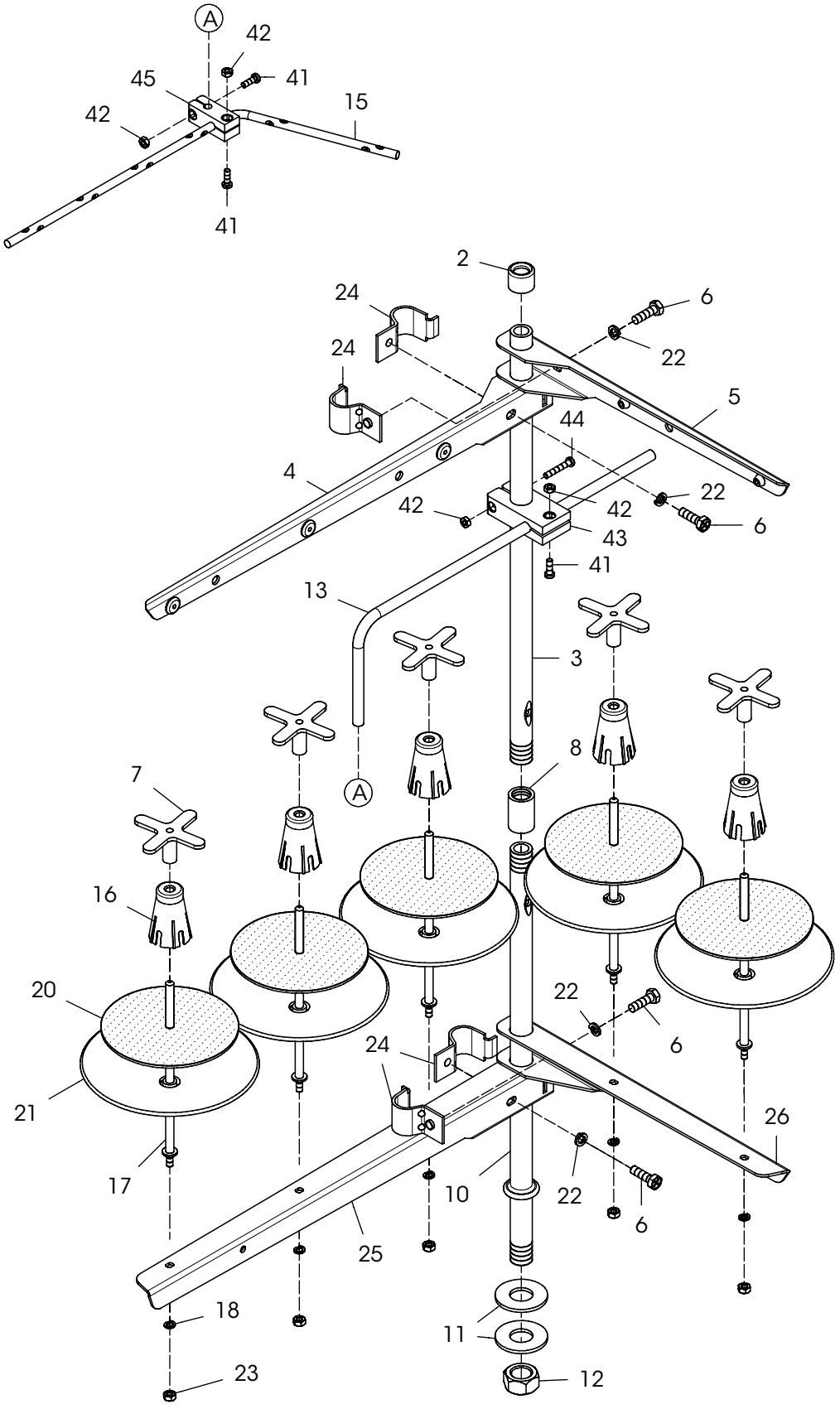
A
42
45
41
15
42
41
2
24
6
24
22
5
44
4
22
42
42
6
43
41
13
3
A
8
7
16
20
22
6
24
21
26
17
10
22
6
25
18
11
23
12

Ref. No.	Parts No.	Description	品 名	Amt. Req.
1	07873101	Thread Stand (5 Spools Type).....	線架 (五線用).....	1
2	07873102	Column Cap.....	柱頭蓋.....	1
3	07873103	Column Pipe (Upper).....	上線柱.....	1
4	07873104	Thread Hanger (3 Spools Type).....	3 孔過線吊臂.....	1
5	07873105	Thread Hanger (2 Spools Type).....	2 孔過線吊臂.....	1
6	07873106	Screw (M6-1×20).....	螺絲 (不單賣).....	4
7	07873107	Rubber Spool Cushion.....	橡膠線軸避震墊.....	5
8	07873108	Column Pipe Connector.....	線柱接頭.....	1
10	07873110	Column Pipe (Lower).....	下線柱.....	1
11	07873111	Washer.....	墊片.....	2
12	07873112	Nut.....	螺帽.....	1
13	07873113	Thread Guide Arm.....	過線桿連接臂.....	1
15	07873115	Thread Guide (6 Spools Type).....	6 孔過線桿.....	1
16	07873116	Spool Cushion.....	線軸避震座.....	5
17	07873117	Spool Pin.....	線軸柱.....	5
18	07873118	Spring Washer.....	彈簧墊片.....	5
19	07873119	Thread Stand (6 Spools Type).....	線架(六線用).....	1
20	07873120	Spool Mat.....	線軸墊.....	5
21	07873121	Spool Seat Disc.....	線軸底盤.....	5
22	07873122	Spring Washer.....	彈簧墊片.....	4
23	07873123	Nut.....	螺帽.....	5
24	07873124	Column Pipe Connector.....	線柱接頭.....	4
25	07873125	Spool Stand (3 Spools Type).....	3 孔線軸架.....	1
26	07873126	Spool Stand (2 Spool Type).....	2 孔線軸架.....	1
41	07873141	Screw (M4-0.7×12).....	螺絲 (不單賣).....	3
42	07873142	Nut.....	螺帽.....	4
43	07873143	Thread Guide Holder (Large).....	大過線桿固定座.....	1
44	07873144	Screw (M4-0.7×24.5).....	螺絲 (不單賣).....	1
45	07873145	Thread Guide Holder (Small).....	小過線桿固定座.....	1

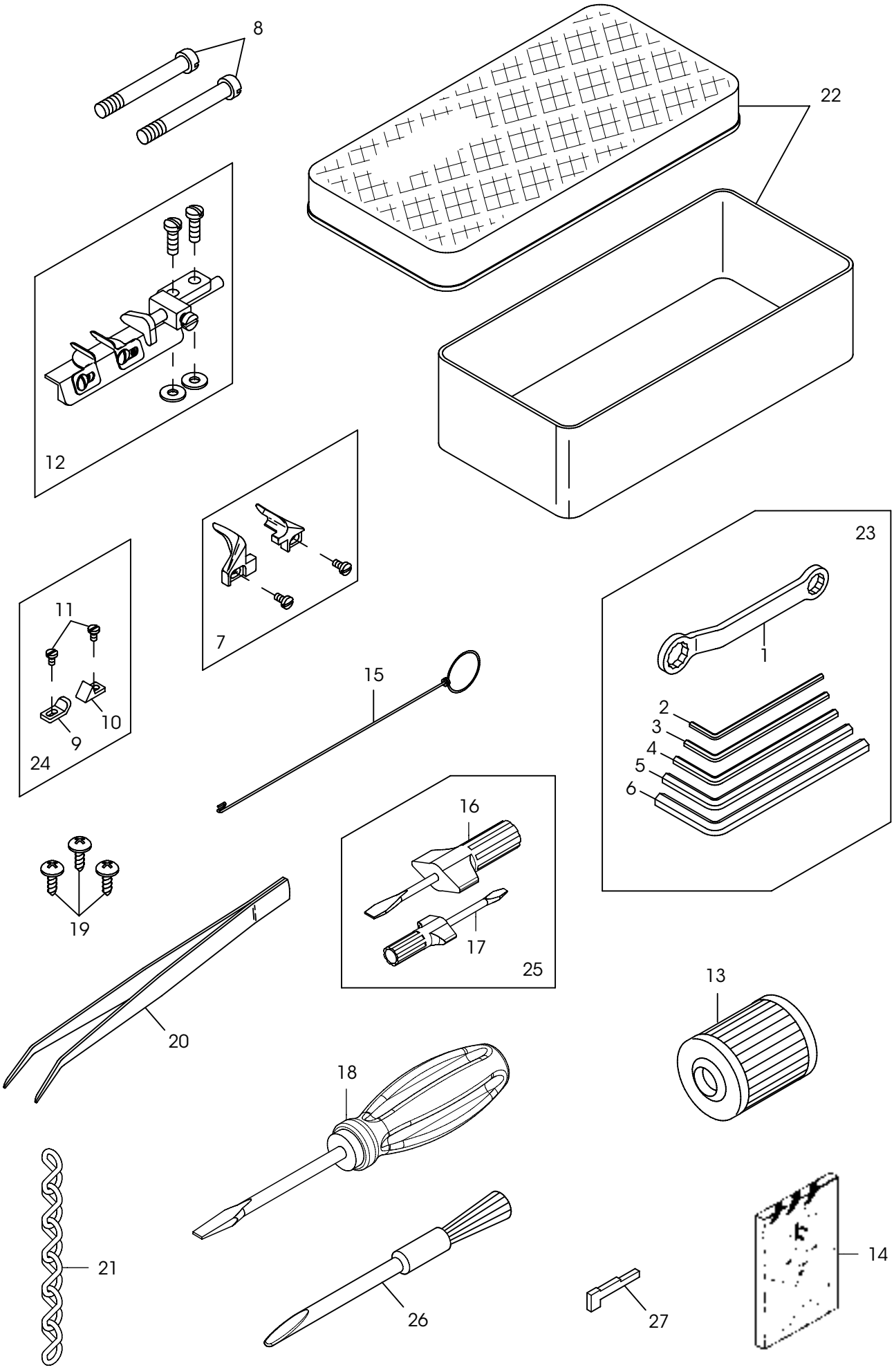
8
22
12
7
23
11
1
15
2
3
4
5
6
10
9
24
16
19
17
25
13
20
18
21
26
27
14

ATTACHMENT BOX 附件盒 **32**

Ref. No.		Parts No.	Description	品 名	Amt. Req.
1		07873201	Ring Spanner	梅花板手	1
2		07873202	Hexagonal Wrench (2.0mm)	內六角板手	1
3		07873203	Hexagonal Wrench (2.5mm)	內六角板手	1
4		07873204	Hexagonal Wrench (3.0mm)	內六角板手	1
5		07873205	Hexagonal Wrench (4.0mm)	內六角板手	1
6		07873206	Hexagonal Wrench (5.0mm)	內六角板手	1
7	★	07870255	HornType Fabric Guide	倒骨布導器	1
8		07873208	Screw (M6-1×44.5)	螺絲(普通機型配備)	2
9		07873209	Straight Type Fabric Guide (Left)	直式布導器 (左)	1
10		07873210	Straight Type Fabric Guide (Right)	直式布導器 (右)	1
11		07873211	Screw (3/32-56×4)	螺絲	2
12		07871401	Bottom Hemming Folder	折下擺組	1
13		07871314	Oil Filter	濾油器	1
14		07870708	Needle (System : UYX128GAS)	擊針組	1
15		07873215	Threading Wire	穿線鐵絲	1
16		07873216	Screwdriver	螺絲起子	1
17		07873217	Screwdriver	螺絲起子	1
18		07873218	Screwdriver	螺絲起子	1
19		07873219	Screw	螺絲(普通機型配備)	3
20		07873220	Thread Tweezers	穿線夾	1
21		07873221	Chain (Attach With Basic Model Only)	鏈條 (普通機型配備)	1
22		07873222	Attachment Box	附件盒	1
23		07873423	Hexagonal Wrench C.Set	內六角板手組	1
24	★	07873224	Straight Type Fabric Guide C.Set	直式布導器組	1
25		07873225	Screwdriver C.Set	起子組	1
26		07873226	Hairbrush	毛刷	1
27		07873227	Gage,Sheet	定規	1

★ 請參照附件一、附件二【標準規格件】

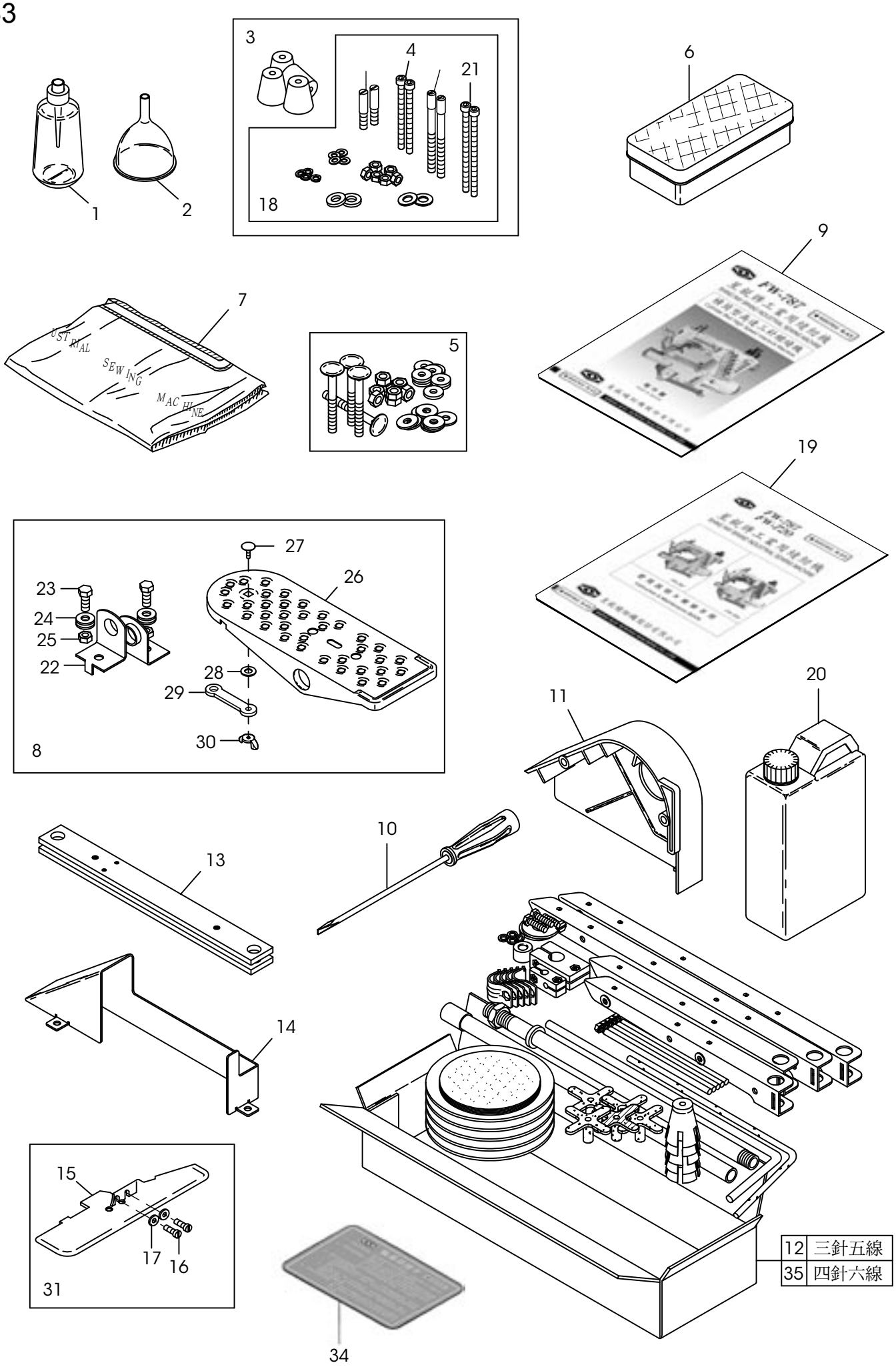
1
2
3
4
21
18
6
9
7
INDUSTRIAL
SEWING
MACHINE
5
19
27
26
23
24
25
22
28
29
30
8
11
20
10
13
14
15
17
16
31
34
12 三針五線
35 四針六線

Ref. No.	Parts No.	Description	品 名	Amt. Req.
1	07873301	Oiler	油壺	1
2	07873302	Funnel	漏斗	1
3	07873303	Oil Reservoir Rubber Cushion C.Set	底座避震膠墊螺絲組	1
4	07873304	Screw (M6-1×80)	螺絲	2
5	07873305	Semi - Submerged Hanging Bolt C. Set	半沉式吊架螺栓組	1
6	07873306	Attachment Box	附件盒	1
7	07873307	Machine Cover	防塵罩	1
8	07873308	Pedal C. Set	腳踏板組(普通車專用)	1
9	07873309	Spare Parts Book	零件圖	1
10	07873310	Screwdriver	螺絲起子	1
11	07873127	Belt Cover (Comon)	皮帶蓋(上)(普通車專用)	1
12	07873312	Thread Stand	線架組(三針五線)	1
13	07873313	Supporting Board (Semi-Submerged Table)	半沉式底座托架	2
14	07873314	Belt Cover (Bottom)	皮帶蓋(下)(普通車專用)	1
15	07873315	Subplate Hemming & Covering	標準輔助板	1
16	07870102	Screw (M4-0.7×12)	螺絲	2
17	07873317	Washer	墊片	2
18	07873318	Screw C.Set	螺絲組	1
19	07873319	Service Manual	維修手冊	1
20	07873320	Oil	潤滑油	1
21	07873321	Screw (M6-1×100)	螺絲	2
22	07873322	Spool Pin	支架	2
23	07873323	Screw	螺絲	2
24	07873324	Washer	墊片	4
25	07873325	Nut	螺帽	2
26	07873326	Pedal	踏板	1
27	07873327	Screw (M6-1×14)	螺絲	1
28	07873328	Washer	墊片	1
29	07873329	Connecting Rod	連接桿	1
30	07873330	Wing Nut	翼形螺帽	1
31	07873331	Q Device Subplate Hemming&Covering C.Set	標準喇叭包邊輔助板組	1
32	07803332	Screw (M6-1×34)	螺絲	2
33	07803333	Screw (M6-1×15)	螺絲	2
34	07873334	Products Guarantee	服務保證卡	1
35	07873335	Thread Stand	線架組(四針六線)	1

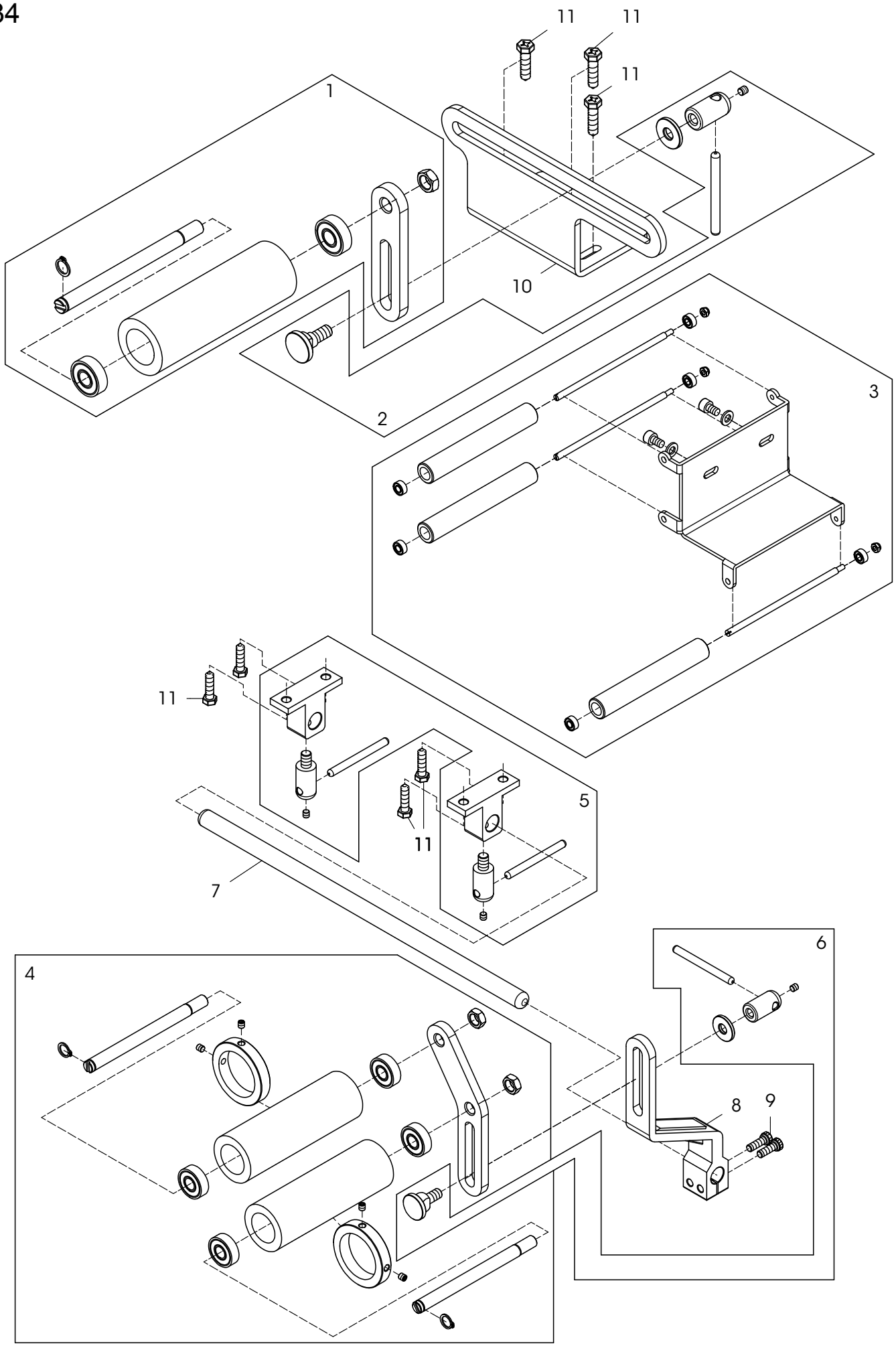
11
11
11
1
10
2
3
11
5
11
7
6
4
8
9

Ref. No.	Parts No.	Description	品　　名	Amt. Req.
1	07873401	Feed Roller C.Set	滾輪組	1
2	07873402	Adjusting Handel C.Set	調整手把組	1
3	07873403	Lap Former Roller .C.Set	導布輪組	1
4	07873404	Feed Roller C.Set	滾輪組	1
5	07873405	Holder C.Set	固定座組	1
6	07873406	Handel C.Set	手把組	1
7	07873407	Shaft	軸	1
8	07873408	Support	支撐架	1
9	07873409	Screw (M6-1×16)	螺絲	2
10	07873410	Holder	固定座	1
11	07873411	Screw (六角十字1/4-1)	自攻螺絲	7
12	07873412	Lap Former .C.Set	導布組	1
13	07873413	Lap Former .C.Set	導布組	1
14	07873414	Knee Connecting Rod .C.Set	膝動連桿組	1
15	★	Presser Foot C.Set	押腳組	1

★ 請參照附件一、附件二【標準規格件】

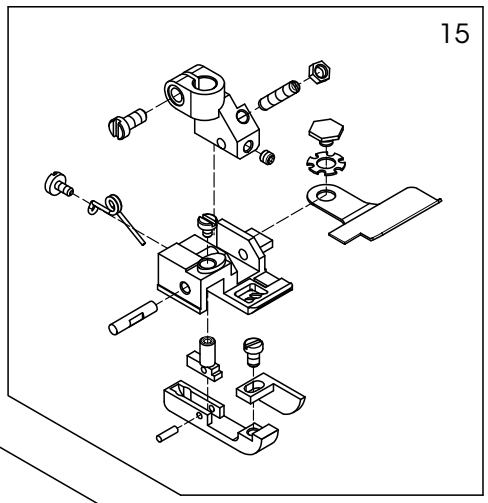
15

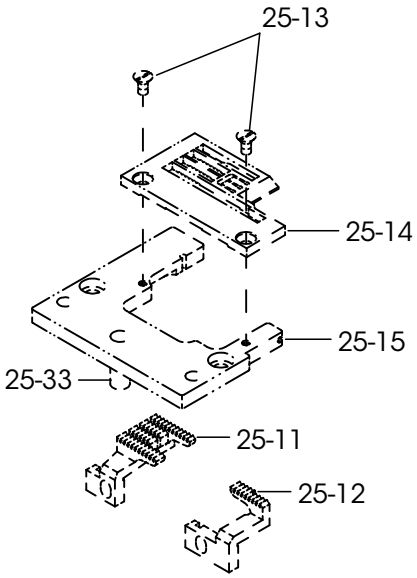
25-13
25-14
25-15
25-33
25-11
25-12

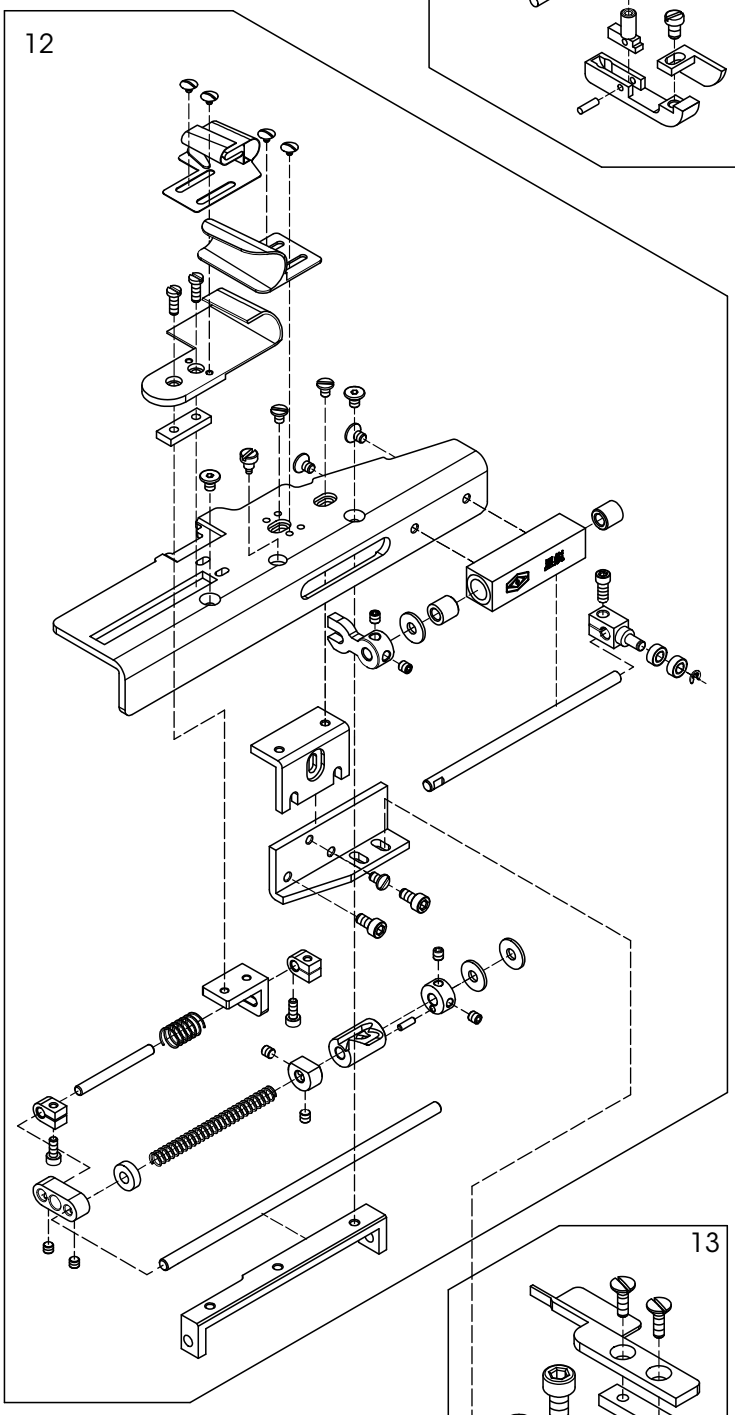
12

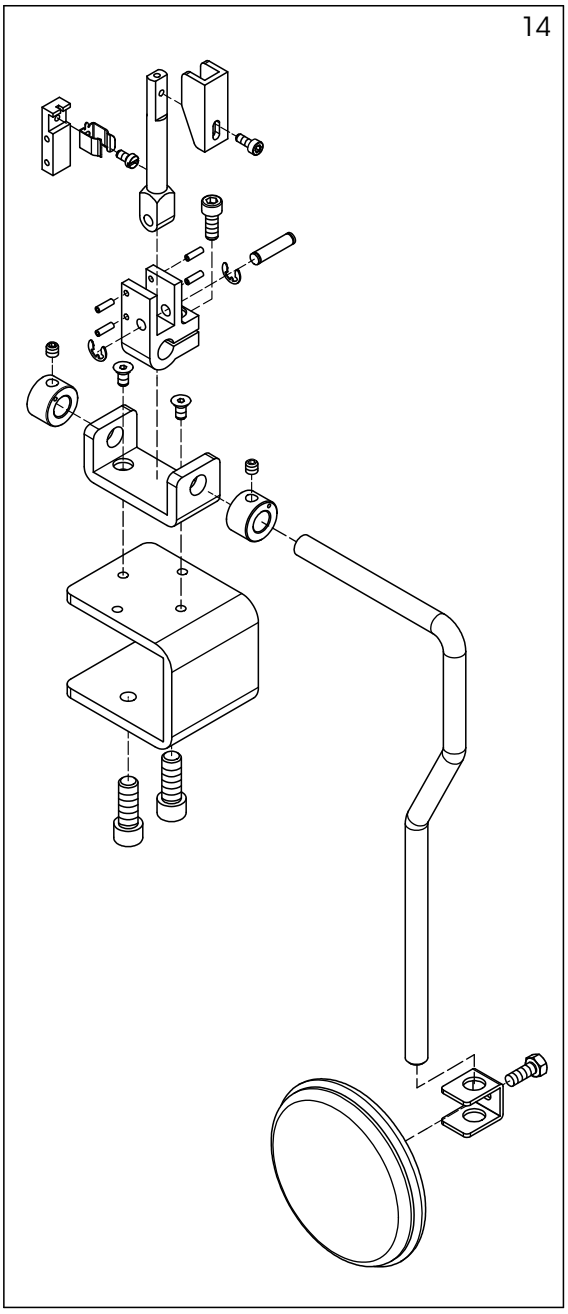
14

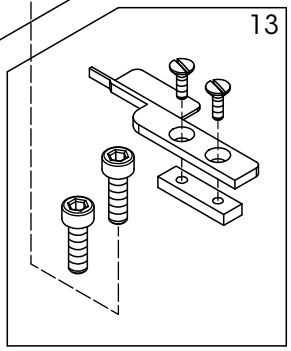
13

Ref. No.	Parts No.	Description	品　　名	Amt. Req.
1	07873401	Feed Roller C.Set	滾輪組	1
2	07873402	Adjusting Handel C.Set	調整手把組	1
3	07873403	Lap Former Roller .C.Set	導布輪組	1
4	07873404	Feed Roller C.Set	滾輪組	1
5	07873405	Holder C.Set	固定座組	1
6	07873406	Handel C.Set	手把組	1
7	07873407	Shaft	軸	1
8	07873408	Support	支撐架	1
9	07873409	Screw (M6-1×16)	螺絲	2
10	07873410	Holder	固定座	1
11	07873411	Screw (六角十字1/4-1)	自攻螺絲	7
12	07873412	Lap Former .C.Set	導布組	1
13	07873413	Lap Former .C.Set	導布組	1
14	07873414	Knee Connecting Rod .C.Set	膝動連桿組	1
15	★	Presser Foot C.Set	押腳組	1

★ 請參照附件一、附件二【標準規格件】

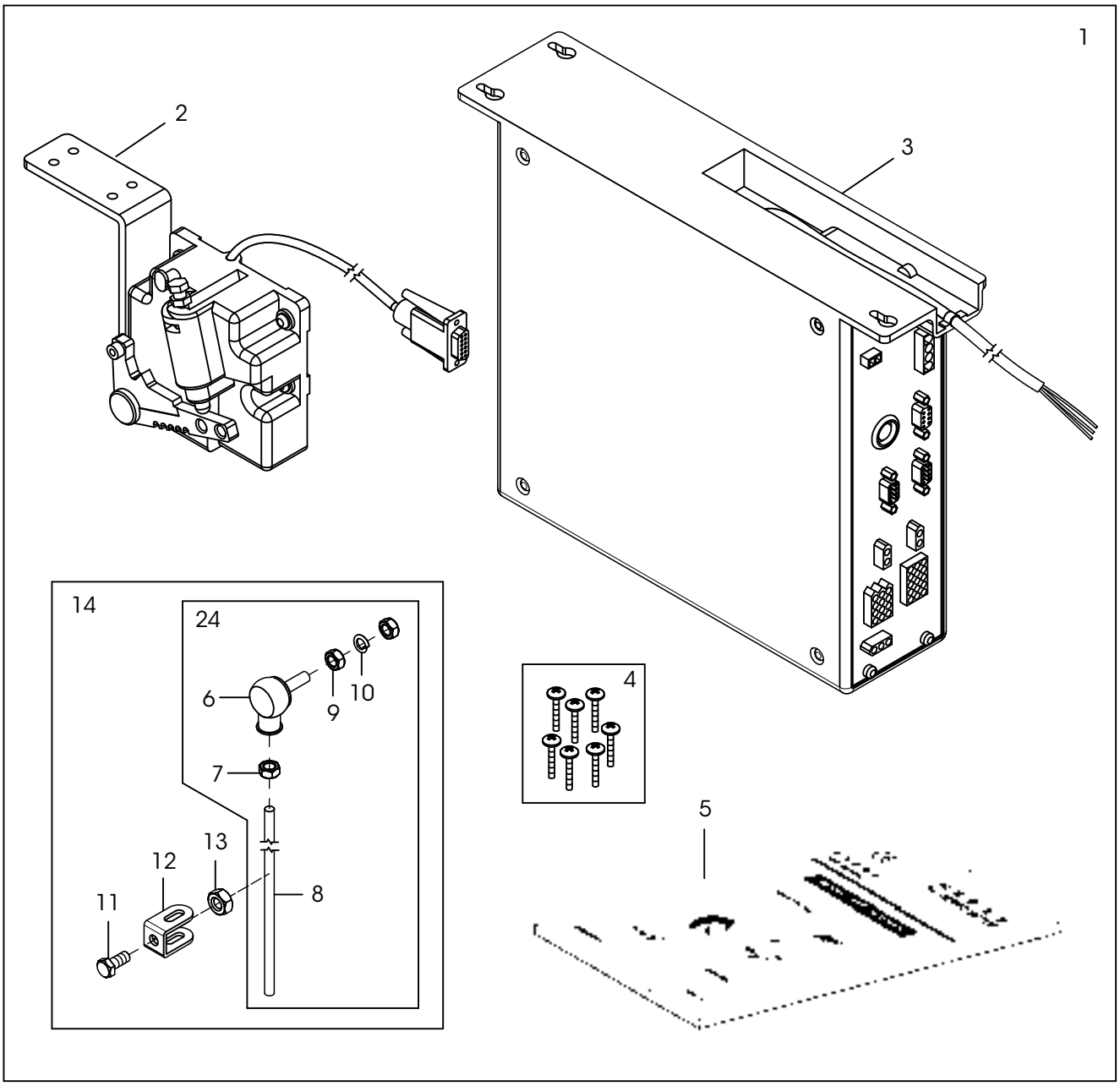
1
2
3
14
24
6
9
10
7
13
12
11
8
4
5

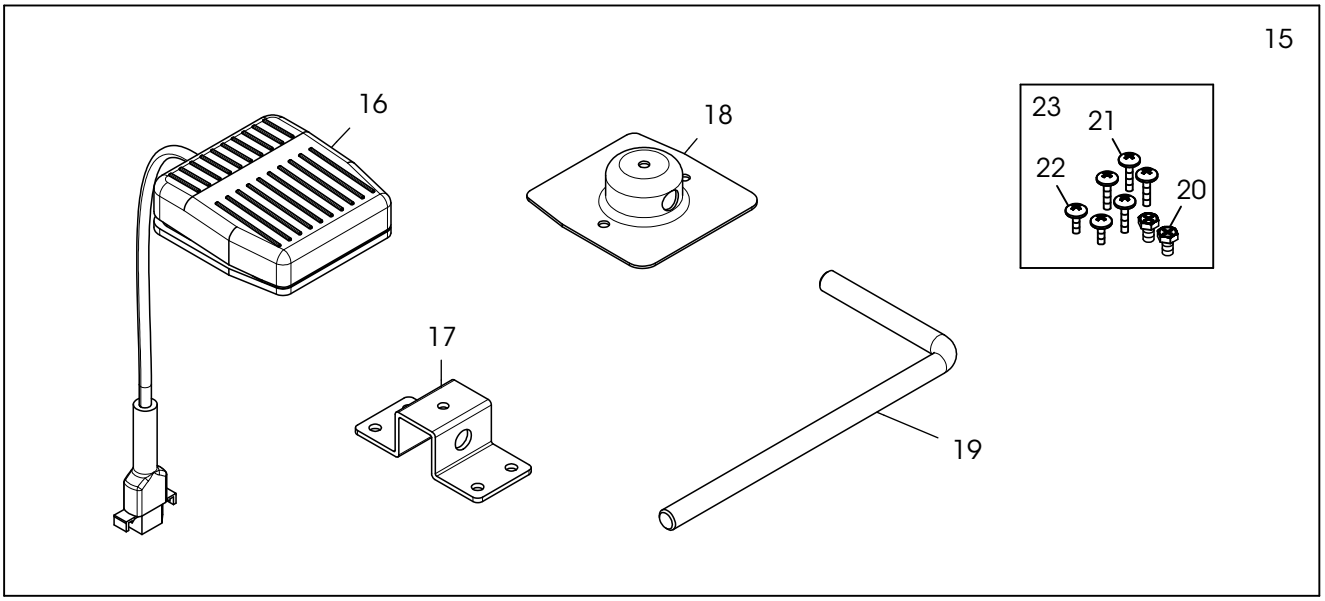
15
16
18
23
21
22
20
17
19

Ref. No.	Parts No.	Description	品 名	Amt. Req.
1	07873501	Ac Servo Motor & Control Box C.Set.....	伺服馬達控制箱組.....	1
2	07873502	Starter.....	起動器.....	1
3	07873503	Control Box.....	控制箱.....	1
4	07873504	Screw.....	木螺絲.....	7
5	07873505	Book, Instruction.....	控制箱操作說明書.....	1
6	07873506	Universal Joint.....	多向接頭.....	2
7	07873507	Nut.....	螺帽.....	2
8	07873508	Connecting Link.....	連桿.....	2
9	07873509	Nut.....	螺帽.....	4
10	07873510	Spring Washer.....	彈簧墊片.....	2
11	07873511	Screw (1/4-28×14).....	螺絲.....	2
12	07873512	Spool Pin.....	冂型支架.....	2
13	07873513	Nut.....	螺帽.....	2
14	07873514	Linkage.....	連桿組.....	1
15	07873515	Knee Switch,C.Set.....	膝動開關組.....	1
16	07873516	Knee Switch.....	膝動開關.....	1
17	07873517	Fixed Plate.....	固定板.....	1
18	07873518	Piece, Clamping.....	夾片.....	1
19	07873519	L-Spool Pin.....	L型支架.....	1
20	07873520	Screw (M6-1×10).....	螺絲.....	2
21	07873521	Screw (Long).....	木螺絲(長).....	4
22	07873522	Screw (Short).....	木螺絲(短).....	2
23	07873523	Screw C.Set.....	螺絲組.....	1
24	07873524	Driving Connection.....	連桿.....	2

36

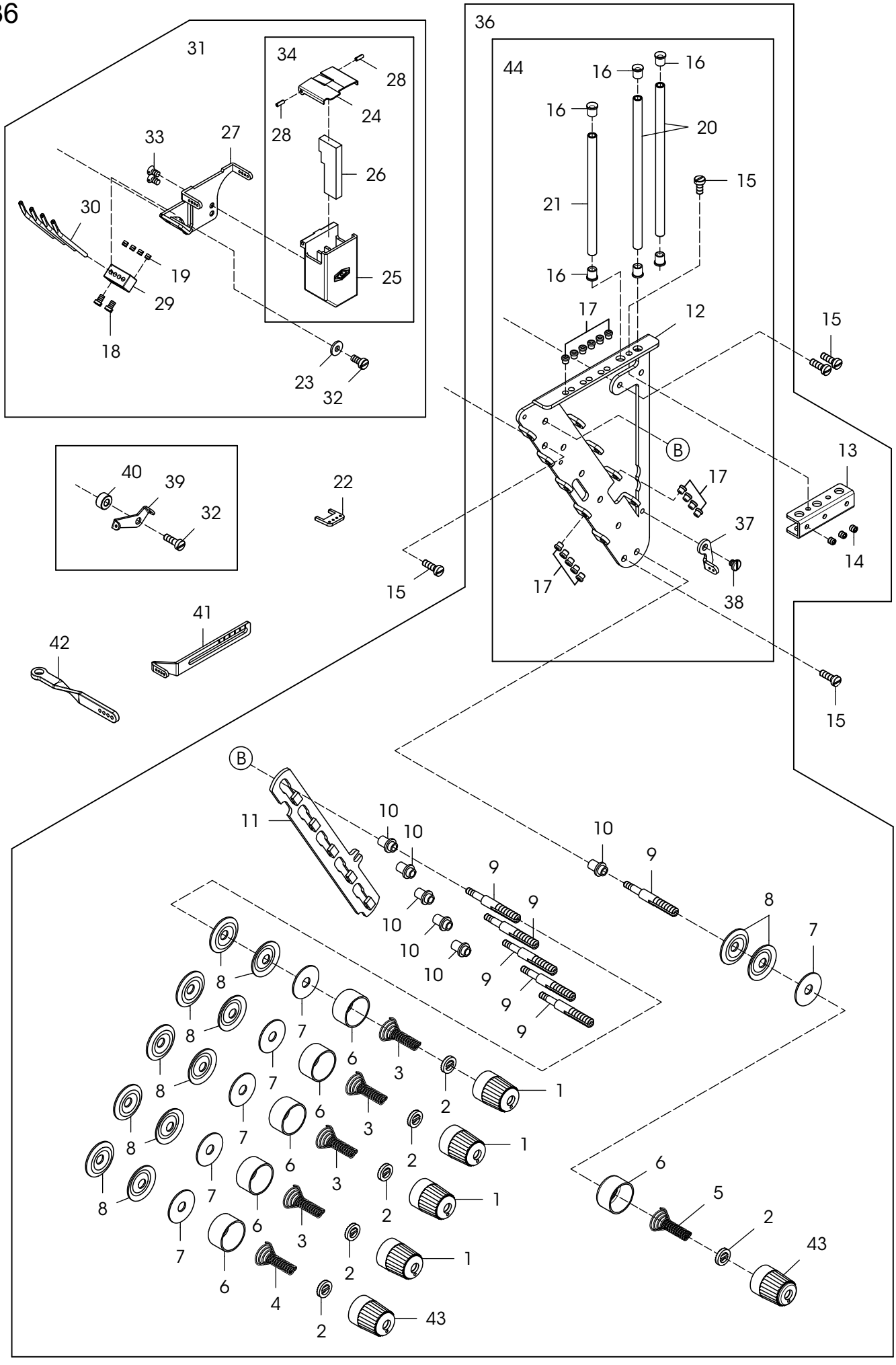

31
34
28
24
28
33
27
26
30
19
25
29
18
23
32
36
44
16
16
16
20
15
21
16
17
12
15
B
13
17
40
39
32
22
37
14
15
17
38
41
42
15
B
11
10
10
10
9
9
9
10
10
10
9
9
9
8
7
8
7
8
7
6
3
2
1
8
7
6
3
2
1
8
7
6
3
2
1
8
7
6
3
2
1
7
6
4
2
43
6
5
2
43

Ref. No.	Parts No.	Description	品 名	Amt. Req.
1	07870301	Thread Tension Spring Cap(Blue).....	上線張力彈簧調整鈕(藍)....	4
2	07870302	Tension Spring Disc Support.....	張力彈簧調整圓盤.....	6
3	07870303	Needle Thread Tension Spring.....	針線張力彈簧.....	4
4	07870304	Top Cover Thread Tension Spring.....	上飾線張力彈簧.....	1
5	07870305	Looper Thread Tension Spring	下勾針張力彈簧.....	1
6	07870306	Thread Tension Spring Retainer.....	上線張力彈簧固定座.....	6
7	07870307	Felt.....	氈墊.....	6
8	07870308	Tension Disc.....	張力調整盤.....	12
9	07870309	Tension Post.....	上線張力彈簧支柱.....	6
10	07870310	Tension Post Ferrule.....	上線張力彈簧支柱套圈.....	6
11	07870311	Tension Disc Separator.....	上線張力圓盤分離器.....	1
12	07870312	Tension Post Support.....	上線張力組支柱座.....	1
13	07873613	Thread Eyelet Pipe Stay.....	過線導管固定座.....	1
14	07870229	Screw (M4-0.7×4).....	螺絲.....	3
15	07870125	Screw (M4-0.7×8).....	螺絲.....	5
16	07400383	Thread Eyelet.....	過線陶瓷(深灰).....	6
17	07870317	Thread Eyelet	陶瓷過線孔.....	15
18	07870318	Screw (1/8-44×5).....	螺絲.....	2
19	07870319	Screw (1/8-44×3).....	螺絲.....	4
20	07870320	Thread Eyelet Pipe (Long).....	過線導管 (長).....	2
21	07870321	Thread Eyelet Pipe (Short).....	過線導管 (短).....	1
22	07873622	Needle Thread Eyelet.....	過線導片.....	1
23	07870323	Washer.....	墊片.....	1
24	07870324	SP Container Cover.....	矽油槽蓋.....	1
25	07870325	SP Container.....	矽油儲存槽.....	1
26	07870326	Felt.....	吸油氈.....	1
27	07870327	Needle Thread Eyelet.....	針線過線架.....	1
28	07870328	SP Container Cover Pin.....	矽油槽蓋固定插銷.....	2
29	07870329	Thread Eyelet Support.....	過線桿固定座.....	1
30	07870330	Thread Eyelet (Front).....	過線桿.....	4
31	07873631	SP Device, Complete Set.....	針線矽油組.....	1
32	07870102	Screw (M4-0.7×12).....	螺絲.....	2
33	07870333	Screw (9/64-40×7).....	螺絲.....	2
34	07870334	SP Container C.Set.....	矽油儲存槽組件.....	1
36	07873636	Tension Post Support C.Set.....	上線張力支柱座組件.....	1
37	07873637	Top Cover Thread Guide.....	上飾線導板.....	1
38	07873638	Screw (M4-0.7×4).....	螺絲.....	1
39	07873639	Looper Thread Eyelet.....	底線輔助導板.....	1
40	07873640	Spacer.....	隔片.....	1
41	07873641	Needle Thread Take-up.....	針線提線過線桿.....	1
42	07873642	Needle Bar Thread Eyelet.....	針柱頂過線桿.....	1
43	07870343	Thread Tension Spring Cap(Red).....	上線張力彈簧調整鈕(紅)....	2
44	07873644	Tension Post Support.....	上線張力支柱座.....	1

37

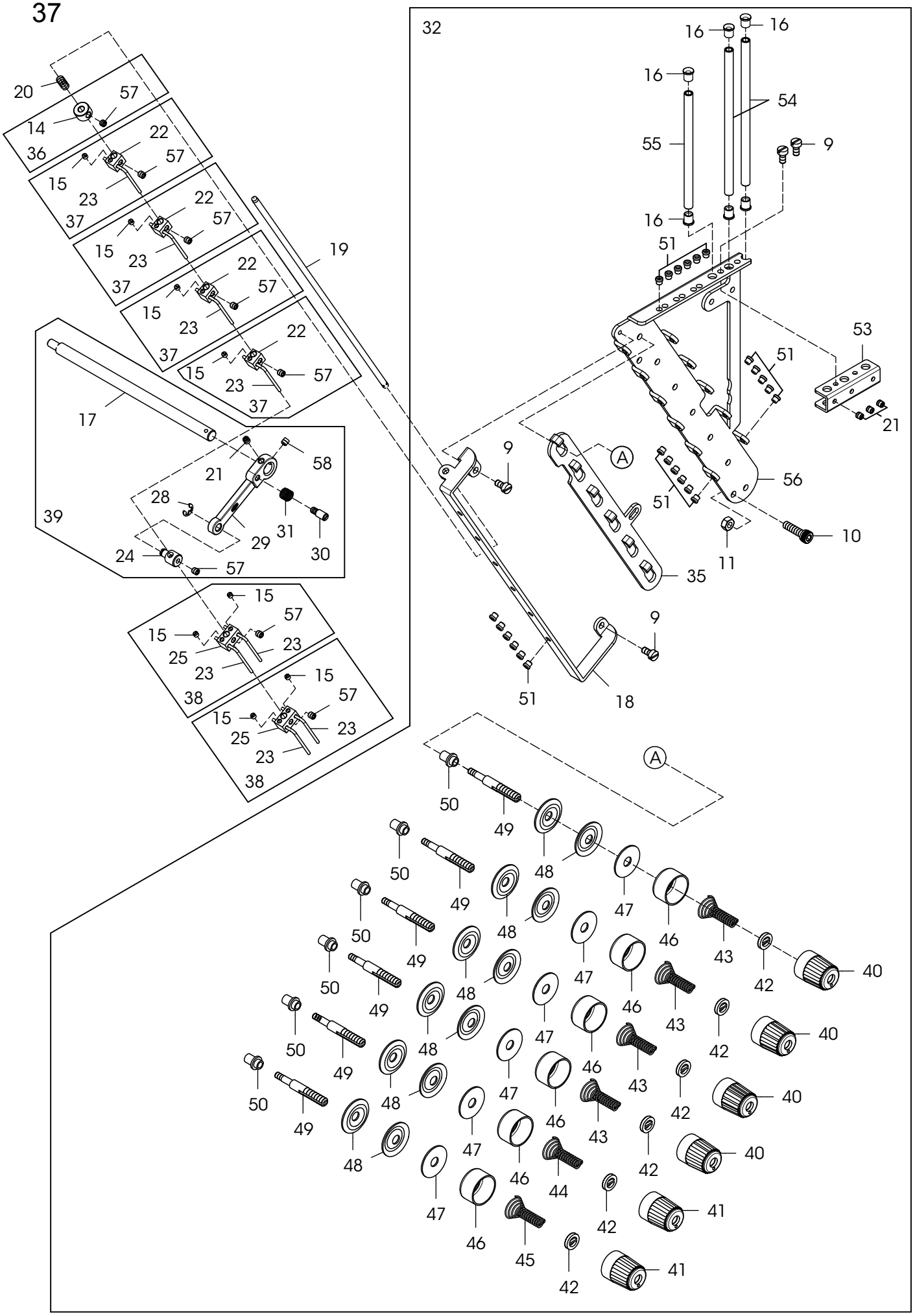

32
16
16
16
54
55
9
16
51
53
51
21
9
A
56
51
10
11
35
9
51
18
20
57
14
36
22
57
15
23
37
22
57
15
23
37
22
57
15
23
37
22
57
15
23
37
19
17
21
58
28
29
31
30
39
24
57
15
57
15
25
23
23
38
15
57
15
25
23
23
38
A
50
49
48
47
46
43
42
40
50
49
48
47
46
43
42
40
50
49
48
47
46
43
42
40
50
49
48
47
46
43
42
40
50
49
48
47
46
43
42
40
50
49
48
47
46
44
42
41
47
46
45
42
41

Ref. No.	Parts No.	Description	品　　名	Amt. Req.
9	07870125	Screw (M4-0.7×8).....	螺絲.....	4
10	30000911	Screw (M5-0.8×18).....	螺絲.....	1
11	07871028	Nut.....	螺帽.....	1
14	07871514	Collar.....	軸環.....	1
15	07870319	Screw (1/8-44×3).....	螺絲.....	8
16	07400383	Thread Eyelet.....	過線陶瓷(深灰).....	6
17	07871517	Tension Release Shaft.....	張力釋放轉軸.....	1
18	07871518	Thread Pull-off Eyelet.....	過線鬆線架.....	1
19	07871519	Thread Pull-off Bar.....	過線鬆線桿.....	1
20	07871520	Swing-Proof Spring.....	防震彈簧.....	1
21	07870229	Screw (M4-0.7×4).....	螺絲.....	4
22	07871522	Thread Pull-off Hook Unit (One Hook).....	鬆線鉤組(單腳).....	4
23	07871523	Hook.....	鬆線鉤.....	8
24	07871524	Thread Pull-off Bar Holder.....	過線鬆線桿固定座.....	1
25	07871525	Thread Pull-off Hook Unit (Double Hook).....	鬆線鉤組(雙腳).....	2
28	07871528	Retaining Ring.....	扣環.....	1
29	07871529	Thread Pull-off Lever.....	過線鬆線拉柄.....	1
30	07871530	Tension Release Adjusting Eccentric.....	張力釋放調整偏心輪.....	1
31	07871531	Spring.....	彈簧.....	1
32	07871532	Thread Eyelet Tension C.Set.....	過線張力組.....	1
35	07871535	Tension Disc Separator.....	過線張力盤分離架.....	1
36	07871536	Collor C.Set.....	軸環組.....	1
37	07871537	Hook C.Set.....	鬆線鉤組.....	4
38	07871538	Hook C.Set.....	鬆線鉤組.....	2
39	07871539	Pull-Off Handle C.Set.....	鬆線拉柄組.....	1
40	07870301	Thread Tension Spring Cap (Blue).....	上線張力彈簧調整鈕(藍)....	4
41	07870343	Thread Tension Spring Cap (Red).....	上線張力彈簧調整鈕(紅)....	2
42	07870302	Thnsion Spring Dise Support.....	張力彈簧調整圓盤.....	6
43	07870303	Needle Thread Tension Spring.....	針線張力彈簧.....	4
44	07870304	Top Cover Thread Tension Spring.....	上飾線張力彈簧.....	1
45	07870305	Looper Thread Tension Spring.....	下勾針鋹力彈簧.....	1
46	07870306	Thread Thnsion Spring Retainer.....	上線張力彈簧固定座.....	6
47	07870307	Felt.....	氈墊.....	6
48	07870308	Thnsion Disc.....	張力調整盤.....	12
49	07870309	Thnsion Post.....	上線張力彈簧支柱.....	6
50	07870310	Thnsion Post Ferrule.....	上線張力彈簧支柱套圈.....	6
51	07870317	Thread Eyelet.....	陶瓷過線孔.....	23
53	07870313	Thread Eyelet Pipe Stay.....	過線導管固定座.....	1
54	07870320	Thread Eyelet Pipe (Long).....	過線導管(長).....	2
55	07870321	Thread Eyelet Pipe (Short).....	過線導管(短).....	1
56	07870312	Thnsion Post Support.....	上線張力組支柱座.....	1
57	07871557	Screw (M4-0.7×3).....	螺絲.....	8
58	07871558	Screw (M4-0.7×4.5).....	螺絲.....	1

07871738

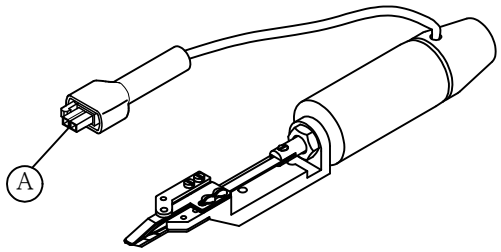

07871718

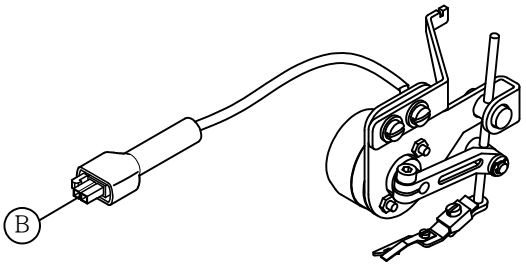

07871909

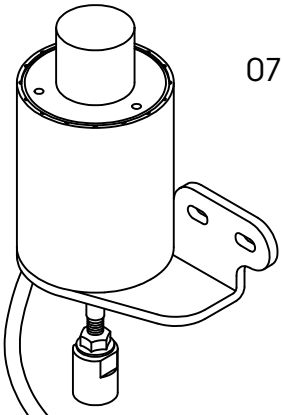

07872107

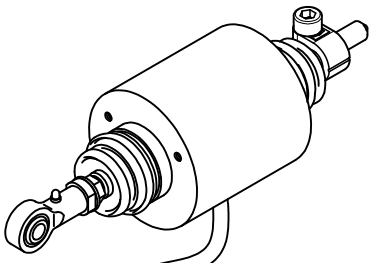

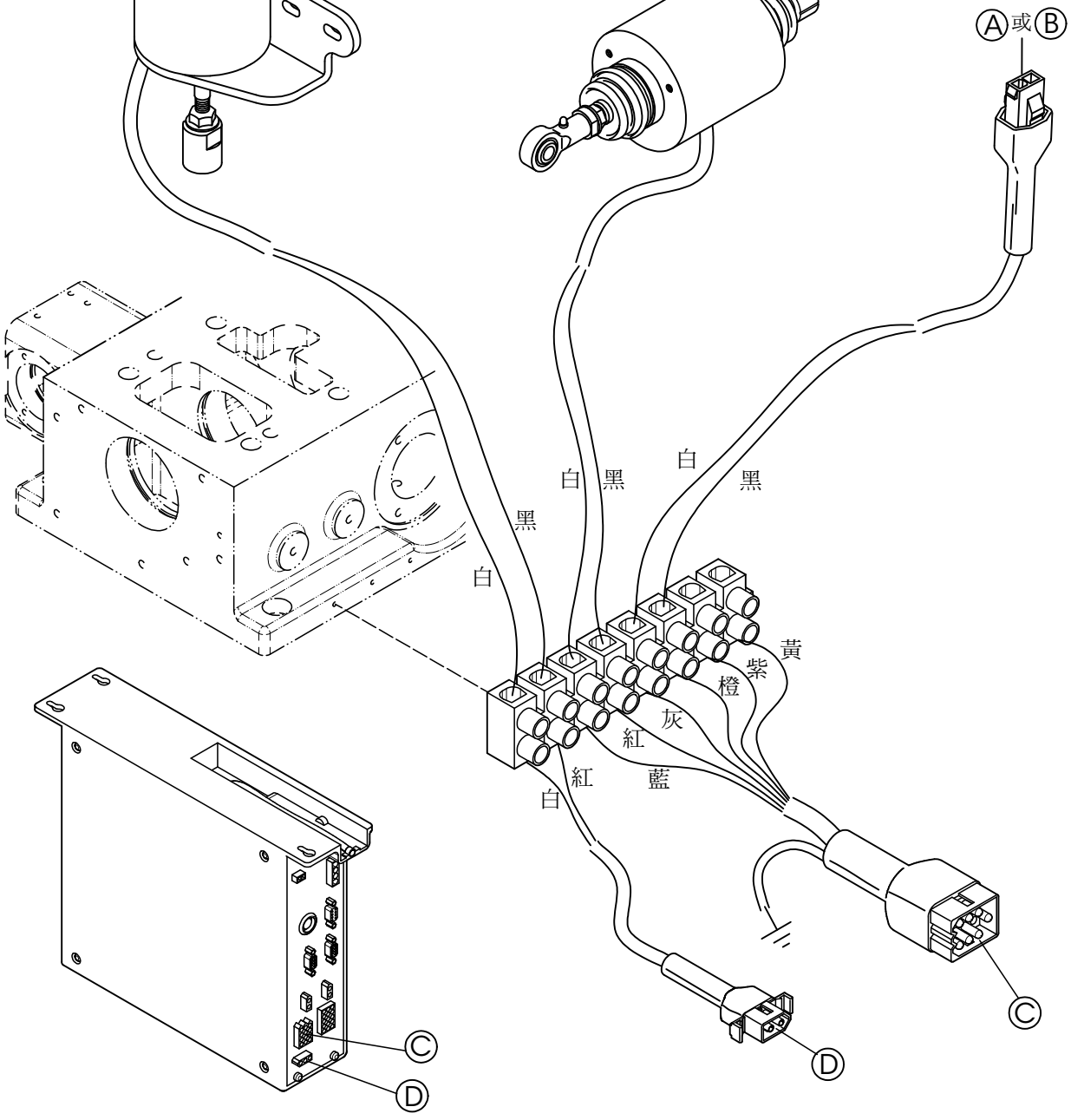

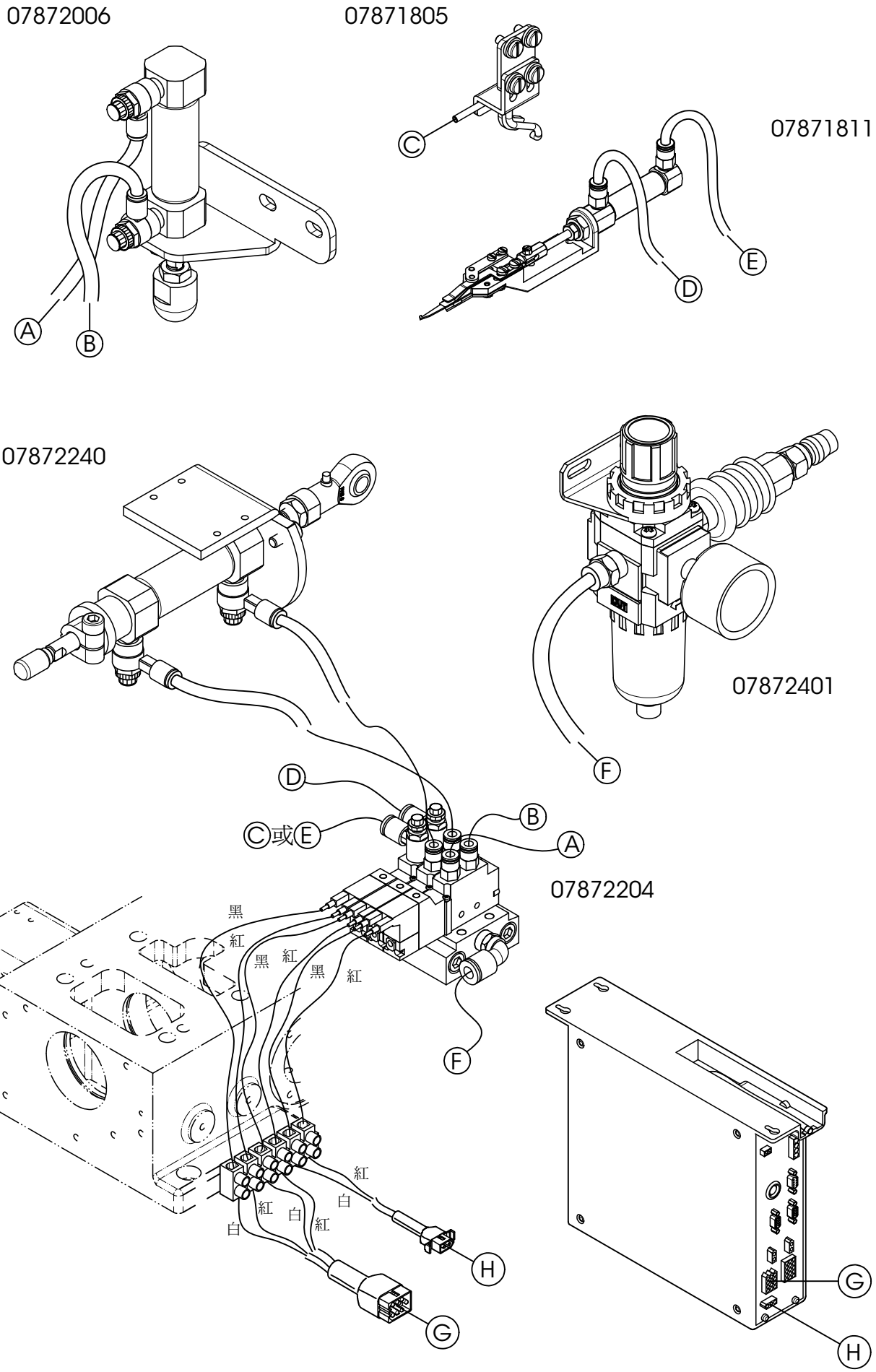
07872006
07871805
07871811
07872240
07872401
07872204
A
B
C
D
E
F
G
H
C或E
黑
紅
白

技 術 通 報

<星銳牌・FW-787T系列、FW-720T系列・平面式附可拆開口桌板・車架及相關配件安裝位置示意圖>

2008年04月02日 版本

單位 = mm

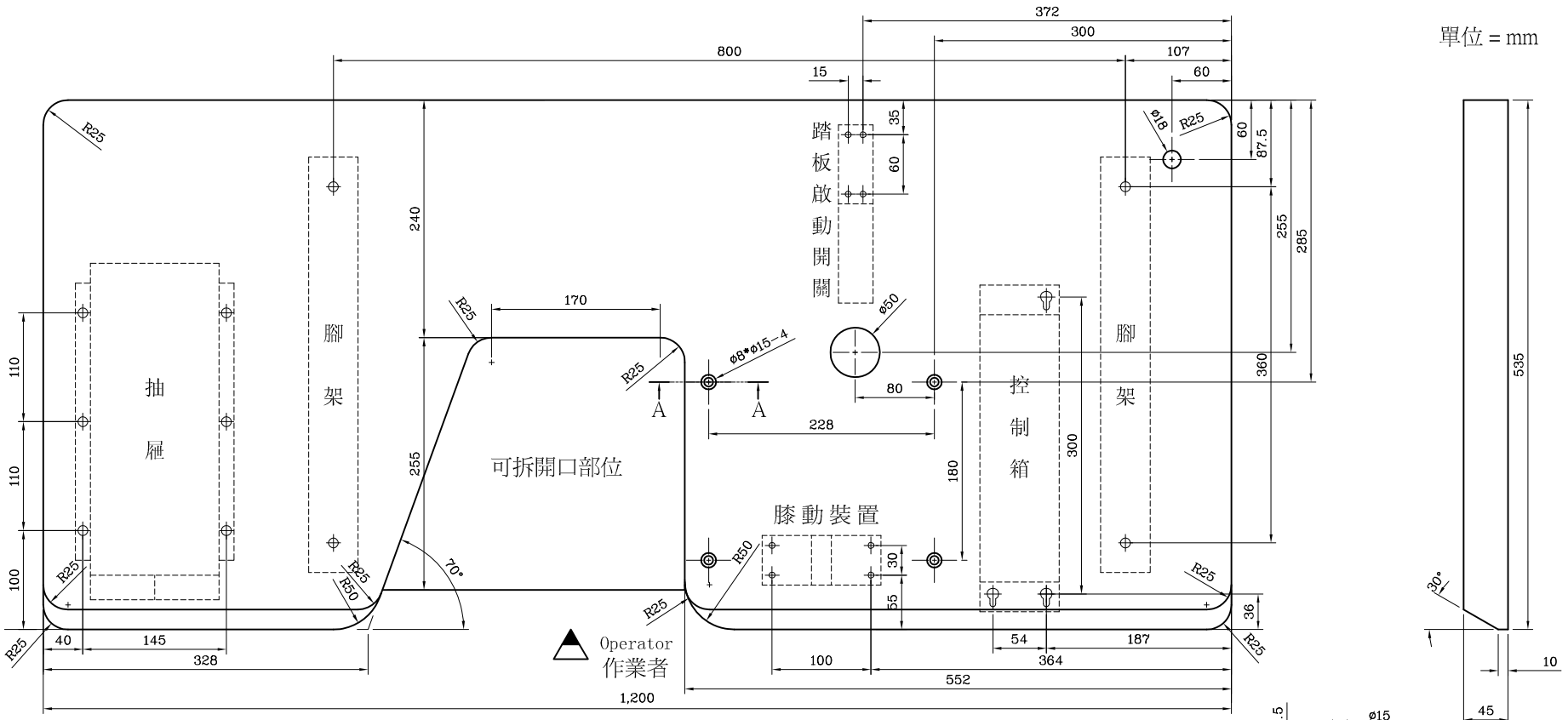

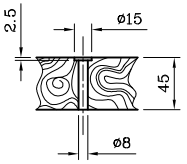

A-A剖視圖

技 術 通 報

<星銳牌・FW-787N系列、FW-720N系列・平面式附可拆開口桌板・車架及相關配件安裝位置示意圖>

2008年04月02日 版本

單位 = mm

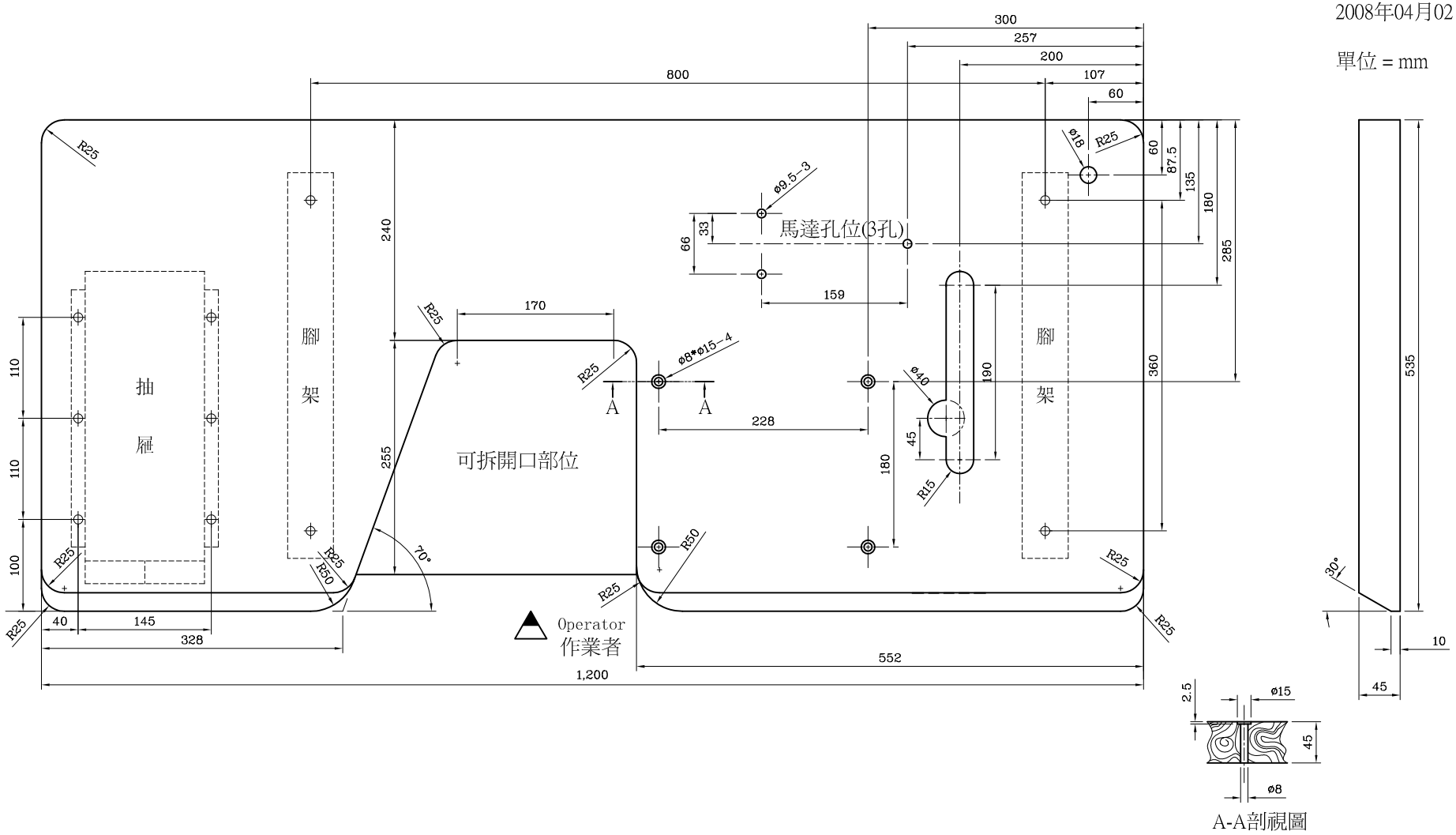

技 術 通 報

<星銳牌・FW-787T(N)系列、FW-720T(N)系列・下沉式兩用桌板・車架及相關配件安裝位置示意圖>

2008年04月02日 版本

單位 = mm

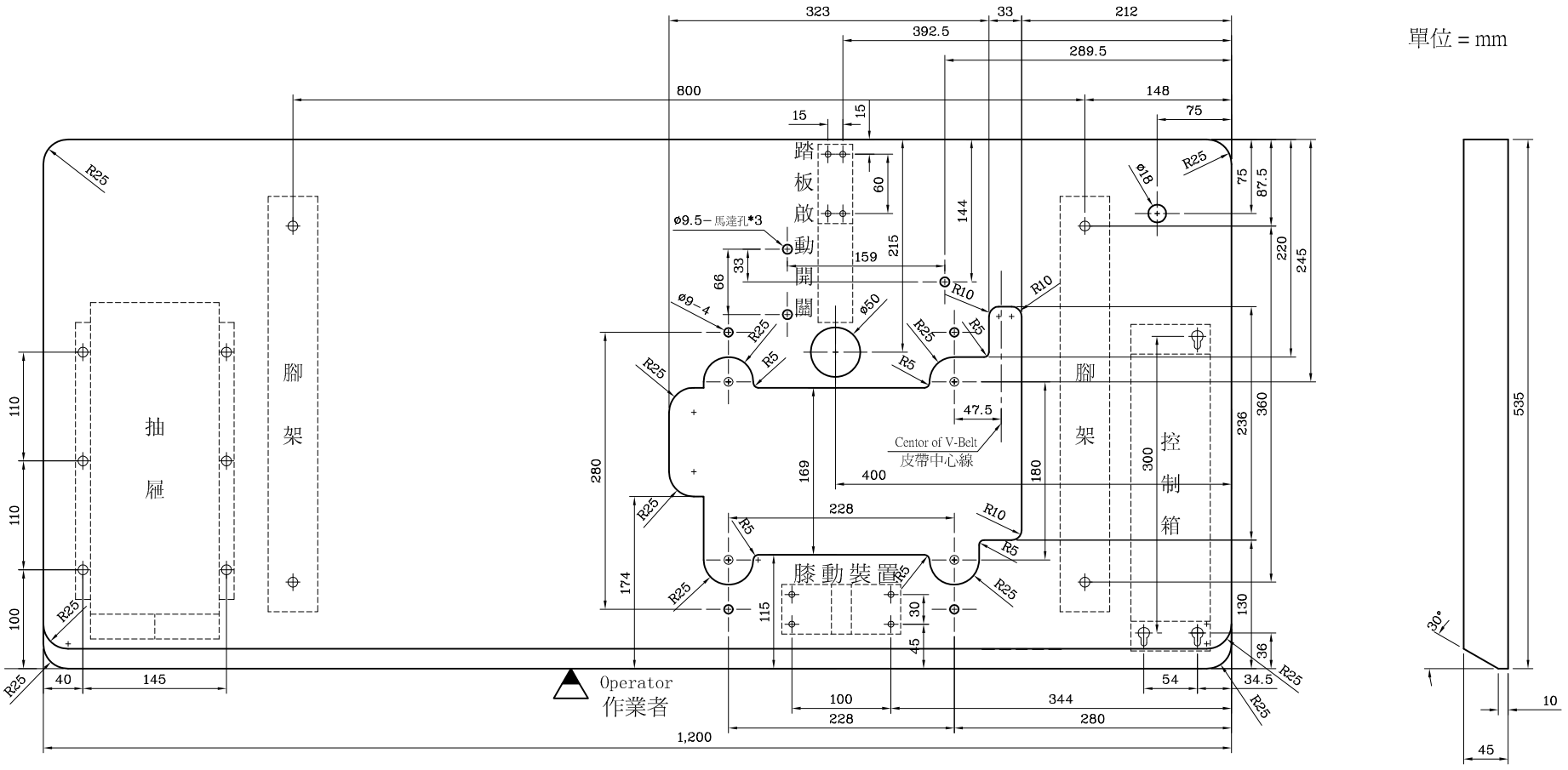

FW-787T(N)系列產品與平面式桌板安裝方式

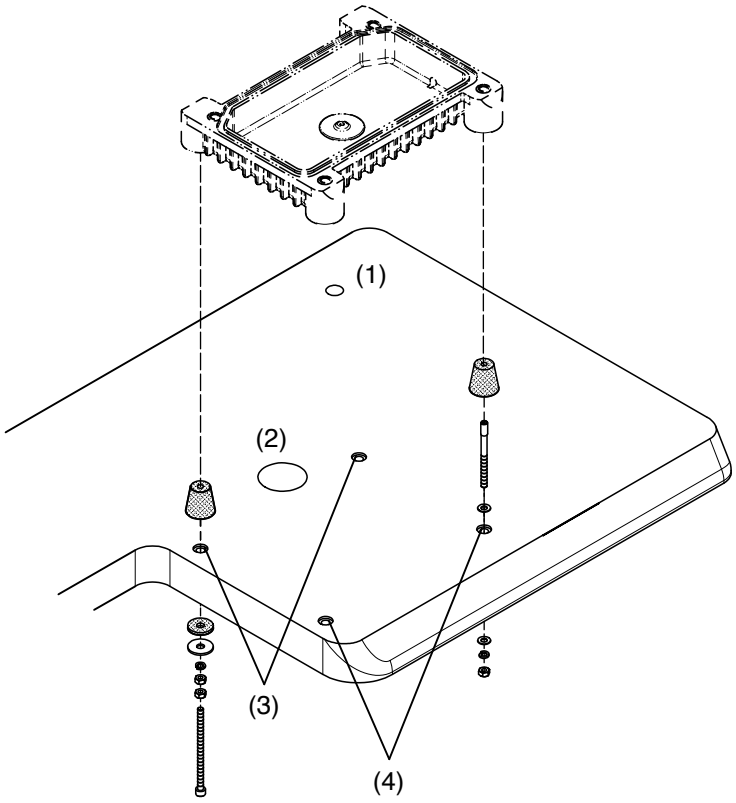

(一) 各部位置說明 :

(1) 線架孔

(2) 中繼線孔(小馬達連接電腦箱) (Ø50mm)

(3) 固定機台孔位(Ø7.5mm),
需使用螺絲組如下圖(a),共兩組

(4) 固定機台孔位(Ø7.5mm),
需使用螺絲組如下圖(b),共兩組

(二) 螺絲種類說明 :

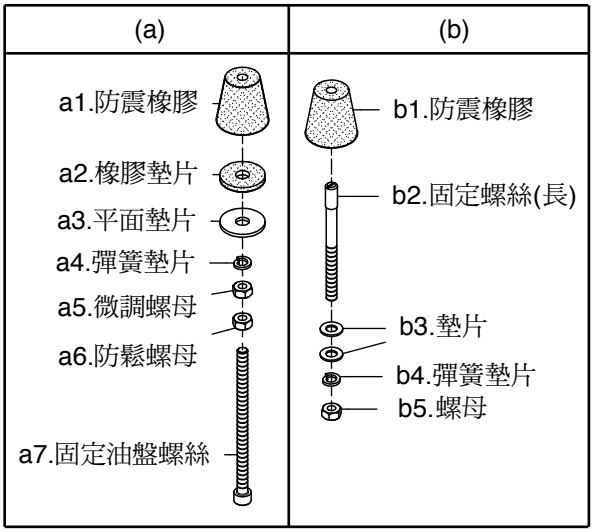

(三) 螺絲組裝說明 :

(a)螺絲安裝步驟 :

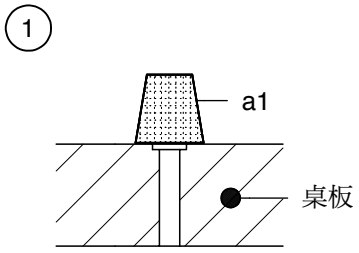

先將防震橡膠孔位
與桌板孔位對齊。

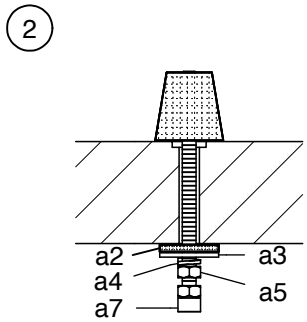

固定油盤螺絲由下往上旋至
頂點，再用微調螺母往上旋轉
接觸桌板底面。
（☆注意！橡膠墊片處於輕微
夾住，平面墊片尚可旋轉狀態）

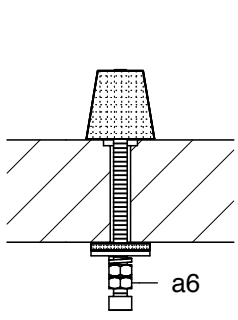

確定微調螺母位置後
固定不動，以防鬆螺母
鎖緊即可 。

(b)螺絲安裝步驟 :

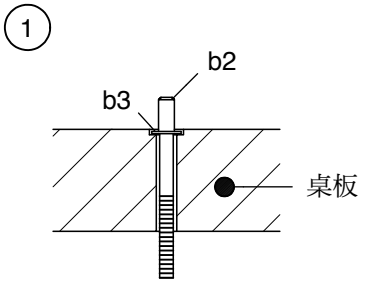

固定螺絲和墊片置入。

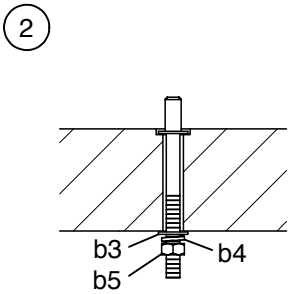

墊片、彈簧墊片、
螺母由下旋入鎖緊。

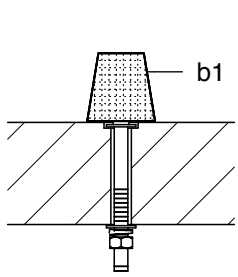

最後將防震橡膠套入。

(一) 各部位置說明 :

(1) 線架孔

(2) 中繼線孔(小馬達連接電腦箱)(Ø50mm)

(3) 托架固定孔X4孔,需使用螺絲如下圖(e),共四組

(5) 固定機台孔位(Ø7.5mm),
需使用螺絲組如下圖(c),共兩組

(6) 固定機台孔位(Ø7.5mm),
需使用螺絲組如下圖(d),共兩組

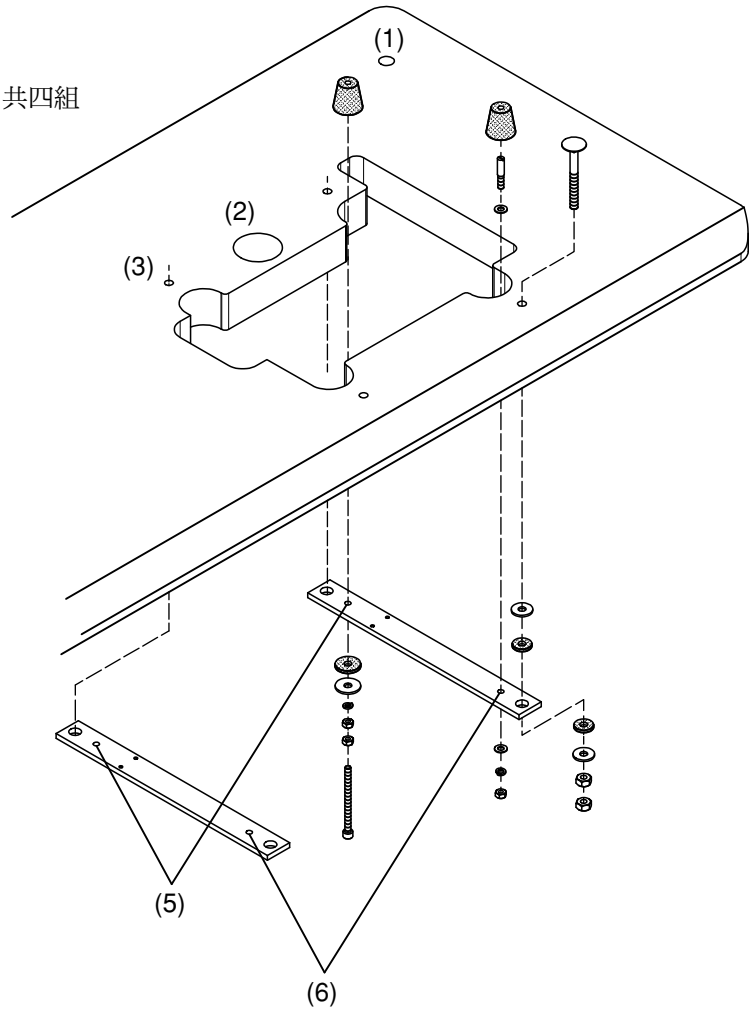

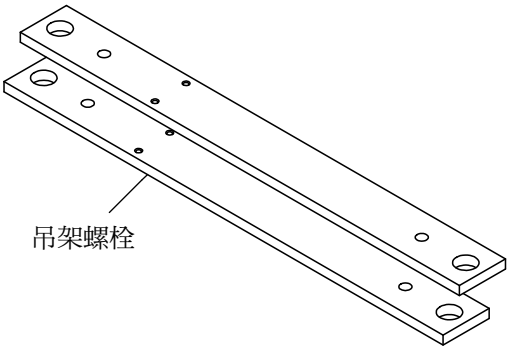

(二) 螺絲組裝說明 :

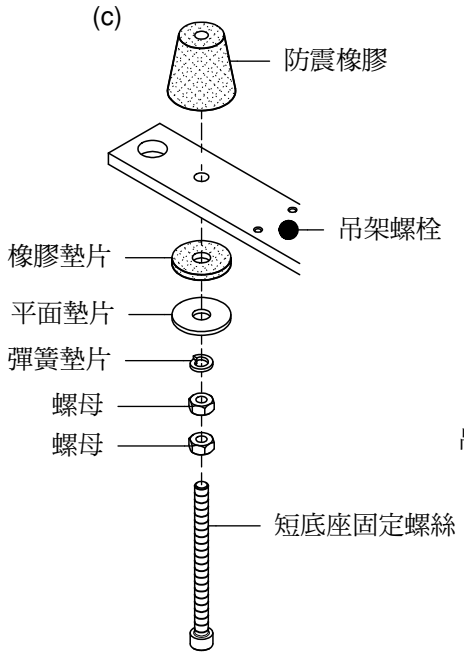

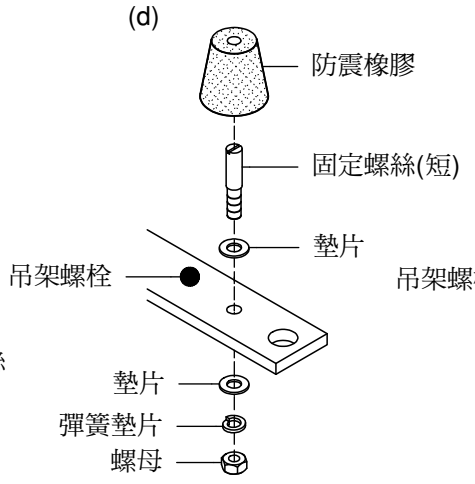

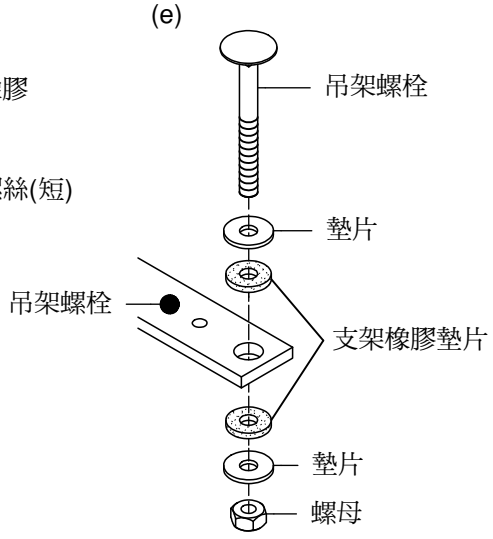

☆(c) 組螺絲安裝步驟請參照"微型小馬達桌板安裝"之(a)組螺絲。

附件一

Main Parts / Models			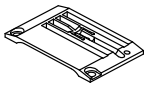				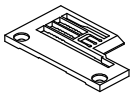
	針鎚	倒骨用針板	立骨用針板	倒骨用針板(短舌)	倒骨用針板(超短舌)	特殊小孔針板	Q組用針板
FW787N/T-240	87300240	87101240					
FW787N/T-248	87300248	87101248					
FW787N/T-348	87300348	87101348					
FW787N/T-356	87300356	87101356					
FW787N/T-364	87300364	87101364					
FW787N/T-456	87300456	87101456					
FW787N/T-460	87300460	87101460					
FW787N/T-464	87300464	87101464					
FW787N/T-240-Q	87300240						87102240
FW787N/T-248-Q	87300248						87102248
FW787N/T-356-Q	87300356						87102356
FW787N/T-364-Q	87300364						87102364
FW787N/T-240-F	87300240						87102240
FW787N/T-248-F	87300248						87102248
FW787N/T-348-F	87300348						87102348
FW787N/T-356-F	87300356						87102356
FW787N/T-364-F	87300364						87102364
FW787N/T-456-F	87300456						87102456
FW787N/T-460-F	87300460						87102460
FW787N/T-464-F	87300464						87102464
FW787N/T-240-L1	87300240	87101240					
FW787N/T-248-L1	87300248	87101248					
FW787N/T-348-L1	87300348	87101348					
FW787N/T-356-L1	87300356	87101356					
FW787N/T-364-L1	87300364	87101364					
FW787N/T-456-L1	87300456	87101456					
FW787N/T-460-L1	87300460	87101460					
FW787N/T-464-L1	87300464	87101464					
FW787T-240-EWT/EST	87300240	87101240					
FW787T-248-EWT/EST	87300248	87101248					
FW787T-348-EWT/EST	87300348	87101348					
FW787T-356-EWT/EST	87300356	87101356					
FW787T-364-EWT/EST	87300364	87101364					
FW787T-456-EWT/EST	87300456	87101456					
FW787T-460-EWT/EST	87300460	87101460					
FW787T-464-EWT/EST	87300464	87101464					
FW787T-240-EWT/EST-Q	87300240						87102240
FW787T-248-EWT/EST-Q	87300248						87102248

GAUGE PARTS LIST

標準規格件

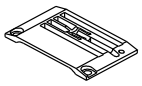		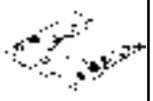	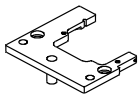	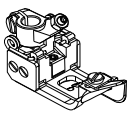	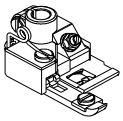	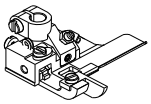	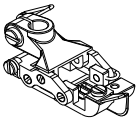	
立骨用針板(短舌)	薄料用針板	一般用針板台	Q組用針板台	一般押腳	Q組用押腳	F組用押腳	戰車押腳	左擋邊押腳
		07870215		87201240				
		07870215		87201248				
		07870215		87201348				
		07870215		87201356				
		07870215		87201364				
		07870215		87201456				
		07870215		87201460				
		07870215		87201464				
			07872515		87202240			
			07872515		87202248			
			07872515		87202356			
			07872515		87202364			
			07872515			87210240		
			07872515			87210248		
			07872515			87210348		
			07872515			87210356		
			07872515			87210364		
			07872515			87210456		
			07872515			87210460		
			07872515			87210464		
		07870215		87201240				
		07870215		87201248				
		07870215		87201348				
		07870215		87201356				
		07870215		87201364				
		07870215		87201456				
		07870215		87201460				
		07870215		87201464				
		07870215		87201240				
		07870215		87201248				
		07870215		87201348				
		07870215		87201356				
		07870215		87201364				
		07870215		87201456				
		07870215		87201460				
		07870215		87201464				
			07872515		87202240			
			07872515		87202248			

附件一

Main Parts / Models		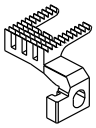	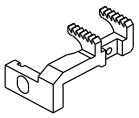		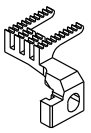	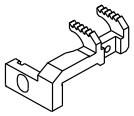	
Models	右擋邊押腳	一般用主齒	一般用差動齒	一般用小齒	薄料用主齒	薄料用差動齒	薄料用小齒
FW787N/T-240		07871239	07871241	07871242			
FW787N/T-248		07871239	07871241	07871242			
FW787N/T-348		07871239	07871241	07871242			
FW787N/T-356		07871239	07871241	07871242			
FW787N/T-364		07871239	07871241	07871242			
FW787N/T-456		07871239	07871241	07871242			
FW787N/T-460		07871239	07871241	07871242			
FW787N/T-464		07871239	07871241	07871242			
FW787N/T-240-Q							
FW787N/T-248-Q							
FW787N/T-356-Q							
FW787N/T-364-Q							
FW787N/T-240-F							
FW787N/T-248-F							
FW787N/T-348-F							
FW787N/T-356-F							
FW787N/T-364-F							
FW787N/T-456-F							
FW787N/T-460-F							
FW787N/T-464-F							
FW787N/T-240-L1		07871239	07871241	07871242			
FW787N/T-248-L1		07871239	07871241	07871242			
FW787N/T-348-L1		07871239	07871241	07871242			
FW787N/T-356-L1		07871239	07871241	07871242			
FW787N/T-364-L1		07871239	07871241	07871242			
FW787N/T-456-L1		07871239	07871241	07871242			
FW787N/T-460-L1		07871239	07871241	07871242			
FW787N/T-464-L1		07871239	07871241	07871242			
FW787T-240-EWT/EST		07871239	07871241	07871242			
FW787T-248-EWT/EST		07871239	07871241	07871242			
FW787T-348-EWT/EST		07871239	07871241	07871242			
FW787T-356-EWT/EST		07871239	07871241	07871242			
FW787T-364-EWT/EST		07871239	07871241	07871242			
FW787T-456-EWT/EST		07871239	07871241	07871242			
FW787T-460-EWT/EST		07871239	07871241	07871242			
FW787T-464-EWT/EST		07871239	07871241	07871242			
FW787T-240-EWT/EST-Q							
FW787T-248-EWT/EST-Q							

GAUGE PARTS LIST

標準規格件

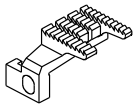				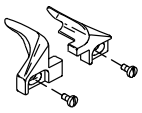	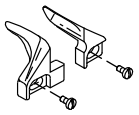	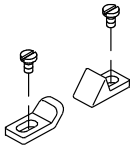	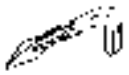	
Q組用主齒	Q組用差動齒	立骨用小齒	擋　邊	倒骨布導器	立骨布導器	直式布導器	下勾針	上勾針
				07870255		07873224	07871001	07870925
				07870255		07873224	07871001	07870925
				07870255		07873224	07871001	07870925
				07870255		07873224	07871001	07870925
				07870255		07873224	07871001	07870925
				07870255		07873224	07871001	07870925
				07870255		07873224	07871001	07870925
				07870255		07873224	07871001	07870925
07872511	07872512			07870255		07873224	07871001	07870925
07872511	07872512			07870255		07873224	07871001	07870925
07872511	07872512			07870255		07873224	07871001	07870925
07872511	07872512			07870255		07873224	07871001	07870925
07872511	07872512			07870255		07873224	07871001	07870925
07872511	07872512			07870255		07873224	07871001	07870925
07872511	07872512			07870255		07873224	07871001	07870925
07872511	07872512			07870255		07873224	07871001	07870925
07872511	07872512			07870255		07873224	07871001	07870925
07872511	07872512			07870255		07873224	07871001	07870925
07872511	07872512			07870255		07873224	07871001	07870925
				07870255		07873224	07871001	07870925
				07870255		07873224	07871001	07870925
				07870255		07873224	07871001	07870925
				07870255		07873224	07871001	07870925
				07870255		07873224	07871001	07870925
				07870255		07873224	07871001	07870925
				07870255		07873224	07871001	07870925
				07870255		07873224	07871001	07870925
				07870255		07873224	07871001	07870925
				07870255		07873224	07871001	07870925
				07870255		07873224	07871001	07870925
				07870255		07873224	07871001	07870925
				07870255		07873224	07871001	07870925
				07870255		07873224	07871001	07870925
				07870255		07873224	07871001	07870925
				07870255		07873224	07871001	07870925
				07870255		07873224	07871001	07870925
07872511	07872512			07870255		07873224	07871001	07870925
07872511	07872512			07870255		07873224	07871001	07870925

附件二

Main Parts / Models			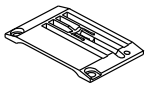				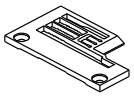
Models	針鎚	倒骨用針板	立骨用針板	倒骨用針板(短舌)	倒骨用針板(超短舌)	特殊小孔針板	Q組用針板
FW787T-356-EWT/EST-Q	87300356						87102356
FW787T-364-EWT/EST-Q	87300364						87102364
FW787T-240-EWT/EST-F	87300240						87102240
FW787T-248-EWT/EST-F	87300248						87102248
FW787T-348-EWT/EST-F	87300348						87102348
FW787T-356-EWT/EST-F	87300356						87102356
FW787T-364-EWT/EST-F	87300364						87102364
FW787T-456-EWT/EST-F	87300456						87102456
FW787T-460-EWT/EST-F	87300460						87102460
FW787T-464-EWT/EST-F	87300464						87102464
FW787T-240-EWT/EST-Q-L1	87300240						87102240
FW787T-248-EWT/EST-Q-L1	87300248						87102248
FW787T-356-EWT/EST-Q-L1	87300356						87102356
FW787T-364-EWT/EST-Q-L1	87300364						87102364
FW787T-240-AWT/AST	87300240	87101240					
FW787T-248-AWT/AST	87300248	87101248					
FW787T-348-AWT/AST	87300348	87101348					
FW787T-356-AWT/AST	87300356	87101356					
FW787T-364-AWT/AST	87300364	87101364					
FW787T-456-AWT/AST	87300456	87101456					
FW787T-460-AWT/AST	87300460	87101460					
FW787T-464-AWT/AST	87300464	87101464					
FW787T-240-AWT/AST-Q	87300240						87102240
FW787T-248-AWT/AST-Q	87300248						87102248
FW787T-356-AWT/AST-Q	87300356						87102356
FW787T-364-AWT/AST-Q	87300364						87102364
FW787T-240-AWT/AST-F	87300240						87102240
FW787T-248-AWT/AST-F	87300248						87102248
FW787T-348-AWT/AST-F	87300348						87102348
FW787T-356-AWT/AST-F	87300356						87102356
FW787T-364-AWT/AST-F	87300364						87102364
FW787T-456-AWT/AST-F	87300456						87102456
FW787T-460-AWT/AST-F	87300460						87102460
FW787T-464-AWT/AST-F	87300464						87102464
FW787T-240-AWT/AST-Q-L1	87300240						87102240
FW787T-248-AWT/AST-Q-L1	87300248						87102248
FW787T-356-AWT/AST-Q-L1	87300356						87102356
FW787T-364-AWT/AST-Q-L1	87300364						87102364

GAUGE PARTS LIST

標準規格件

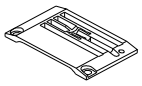			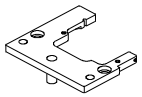	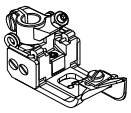	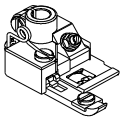	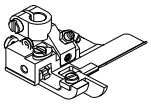	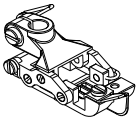	
立骨用針板(短舌)	薄料用針板	一般用針板台	Q組用針板台	一般押腳	Q組用押腳	F組用押腳	戰車押腳	左擋邊押腳
			07872515		87202356			
			07872515		87202364			
			07872515			87210240		
			07872515			87210248		
			07872515			87210348		
			07872515			87210356		
			07872515			87210364		
			07872515			87210456		
			07872515			87210460		
			07872515			87210464		
			07872515		87202240			
			07872515		87202248			
			07872515		87202356			
			07872515		87202364			
		07870215		87201240				
		07870215		87201248				
		07870215		87201348				
		07870215		87201356				
		07870215		87201364				
		07870215		87201456				
		07870215		87201460				
		07870215		87201464				
			07872515		87202240			
			07872515		87202248			
			07872515		87202356			
			07872515		87202364			
			07872515			87210240		
			07872515			87210248		
			07872515			87210348		
			07872515			87210356		
			07872515			87210364		
			07872515			87210456		
			07872515			87210460		
			07872515			87210464		
			07872515		87202240			
			07872515		87202248			
			07872515		87202356			
			07872515		87202364			

附件二

Main Parts / Models		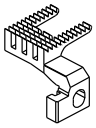	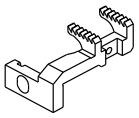		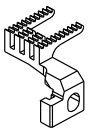	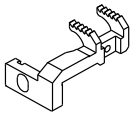	
	右擋邊押腳	一般用主齒	一般用差動齒	一般用小齒	薄料用主齒	薄料用差動齒	薄料用小齒
FW787T-356-EWT/EST-Q							
FW787T-364-EWT/EST-Q							
FW787T-240-EWT/EST-F							
FW787T-248-EWT/EST-F							
FW787T-348-EWT/EST-F							
FW787T-356-EWT/EST-F							
FW787T-364-EWT/EST-F							
FW787T-456-EWT/EST-F							
FW787T-460-EWT/EST-F							
FW787T-464-EWT/EST-F							
FW787T-240-EWT/EST-Q-L1							
FW787T-248-EWT/EST-Q-L1							
FW787T-356-EWT/EST-Q-L1							
FW787T-364-EWT/EST-Q-L1							
FW787T-240-AWT/AST		07871239	07871241	07871242			
FW787T-248-AWT/AST		07871239	07871241	07871242			
FW787T-348-AWT/AST		07871239	07871241	07871242			
FW787T-356-AWT/AST		07871239	07871241	07871242			
FW787T-364-AWT/AST		07871239	07871241	07871242			
FW787T-456-AWT/AST		07871239	07871241	07871242			
FW787T-460-AWT/AST		07871239	07871241	07871242			
FW787T-464-AWT/AST		07871239	07871241	07871242			
FW787T-240-AWT/AST-Q							
FW787T-248-AWT/AST-Q							
FW787T-356-AWT/AST-Q							
FW787T-364-AWT/AST-Q							
FW787T-240-AWT/AST-F							
FW787T-248-AWT/AST-F							
FW787T-348-AWT/AST-F							
FW787T-356-AWT/AST-F							
FW787T-364-AWT/AST-F							
FW787T-456-AWT/AST-F							
FW787T-460-AWT/AST-F							
FW787T-464-AWT/AST-F							
FW787T-240-AWT/AST-Q-L1							
FW787T-248-AWT/AST-Q-L1							
FW787T-356-AWT/AST-Q-L1							
FW787T-364-AWT/AST-Q-L1							

GAUGE PARTS LIST 標準規格件

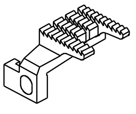	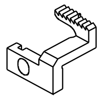	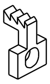	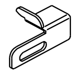	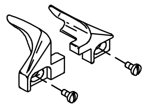	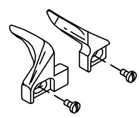	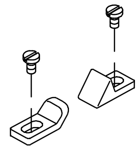	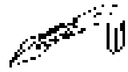	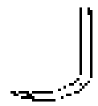
Q組用主齒	Q組用差動齒	立骨用小齒	擋 邊	倒骨布導器	立骨布導器	直式布導器	下勾針	上勾針
07872511	07872512			07870255		07873224	07871001	07870925
07872511	07872512			07870255		07873224	07871001	07870925
07872511	07872512			07870255		07873224	07871001	07870925
07872511	07872512			07870255		07873224	07871001	07870925
07872511	07872512			07870255		07873224	07871001	07870925
07872511	07872512			07870255		07873224	07871001	07870925
07872511	07872512			07870255		07873224	07871001	07870925
07872511	07872512			07870255		07873224	07871001	07870925
07872511	07872512			07870255		07873224	07871001	07870925
07872511	07872512			07870255		07873224	07871001	07870925
07872511	07872512			07870255		07873224	07871001	07870925
07872511	07872512			07870255		07873224	07871001	07870925
07872511	07872512			07870255		07873224	07871001	07870925
07872511	07872512			07870255		07873224	07871001	07870925
				07870255		07873224	07871001	07870925
				07870255		07873224	07871001	07870925
				07870255		07873224	07871001	07870925
				07870255		07873224	07871001	07870925
				07870255		07873224	07871001	07870925
				07870255		07873224	07871001	07870925
				07870255		07873224	07871001	07870925
				07870255		07873224	07871001	07870925
07872511	07872512			07870255		07873224	07871001	07870925
07872511	07872512			07870255		07873224	07871001	07870925
07872511	07872512			07870255		07873224	07871001	07870925
07872511	07872512			07870255		07873224	07871001	07870925
07872511	07872512			07870255		07873224	07871001	07870925
07872511	07872512			07870255		07873224	07871001	07870925
07872511	07872512			07870255		07873224	07871001	07870925
07872511	07872512			07870255		07873224	07871001	07870925
07872511	07872512			07870255		07873224	07871001	07870925
07872511	07872512			07870255		07873224	07871001	07870925
07872511	07872512			07870255		07873224	07871001	07870925
07872511	07872512			07870255		07873224	07871001	07870925
07872511	07872512			07870255		07873224	07871001	07870925
07872511	07872512			07870255		07873224	07871001	07870925
07872511	07872512			07870255		07873224	07871001	07870925
07872511	07872512			07870255		07873224	07871001	07870925